ISSN (O): 2393-8609

International Journal of Aerospace and Mechanical Engineering

Volume 2 – No.6, December 2015

ANALYSIS OF FUSELAGE FLOOR BEAM

Ruhani Thakur
B.Tech. (Aeronautical)
GVIET
ruhanithakur@rocketmail.com

Tanya Ramdev
B.Tech. (Aeronautical)
GVIET
tnramdev@gmail.com

Inderjeet Sekhon
B. Tech. (Aerospace)
GVIET
Indusekhon1803@gmail.com

ABSTRACT

In this paper, we describe stress analysis of Fuselage floor beam which, is used as I-beam i.e. the cross section of beam is of I-shape. Now-a-days due to the growth of aircraft industry, airplanes are used to transport heavier things and they are made to carry more passengers. The fuselage floor which directly bears the weight being carried must be strong and be able to withstand loads and the cyclic loads. This is the main reason for introduction of I-beam with longerons in fuselage floor. We analyze this beam and study whether it is feasible or not.

1. INTRODUCTION

There are three types of fuselage: truss type, monocoque and the semi-monocoque type. The most used and rigid type is the semi-monocoque one. In addition to having formers, frame assemblies, and bulkheads, the semi-monocoque construction has the skin reinforced by longitudinal members namely longerons or stringers. The strong, heavy longerons hold the bulkheads and formers. The bulkheads and formers hold the stringers. All of these join together to form a rigid fuselage framework. Stringers and longerons prevent tension and compression stresses from bending the fuselage. Over the years, due to cyclic loading, longerons start failing and develop cracks. Thus, we use I-beam to support longerons. This I-beam is placed between the longeron and fuselage floor at the end and beginning of the longeron. The horizontal elements of the "I" are known as flanges, while the vertical element is termed as "Web". The web resists shear forces, while the flanges resist most of bending moment experienced by the beam. This beam is present at both ends of the longerons. Beam theory shows that the I-shaped section is very efficient form for carrying both bending and shears loads in the plane of the web.

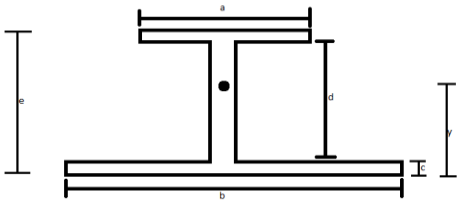

2. LITERATURE

1) **Fuselage floor bearing carcass and its support beam; Patent Russia 244/2440278**
   Invention relates to aircraft engineering, particularly, to fuselage floor carcass and its support beam. Support beam profile in cross section represent I-beam with its top flange provided with rectangular ledge running along beam length and furnished with T-like slot. Ends of top flanges of support beams are jointed to top flanges of transverse beams. Transverse beams represent T-like section furnished with one-sided flange arranged at lower section. Support beams are provided with cutouts with transverse beams passed there through. Support carcass has brackets made from the base and jointed thereto by wall and attachment elements arranged in support beam slot and passed through top flanges of support and transverse beams.
2) **Aircraft floor and fuselage supplied with said floor; Patent US 8317133 B2 by Guy Nolla in 2012:**
   An aircraft floor including two lengthwise external beams and at least one pair of cross beams extending between the lengthwise beams, an external end of each cross beam being interlocked to the lengthwise beam. The internal ends of the beams of the pair of the cross beams are connected to each other, where the cross beams are inclined in such a way that the internal ends of the cross beams.
3) **Beam for an aircraft fuselage floor; European Patent EP2593360 by Krog Lars , Ryan, Gary in 2015:**
   A beam (20) comprising first and second flanges (23, 24), the beam (20) having a first region (28, 30) extending between the flanges (23, 24) and a second region (26) extending between the flanges. The first region (28, 30) is designed to support an applied concentrated shear load and the second region (26) is designed to support a predominantly bending load.
4) **Floor beam assembly, system and associated method; Patent US7775478B2 by Jeffrey H. Wood, John H. Fogarty in 2010:**
   A floor beam assembly, system, and method for installing floor beams within a structure are provided. According to one embodiment, a floor beam assembly for installing a floor beam within a structure is provided.
5) **Integrated aircraft floor with longitudinal beams ; US8240606 B2 by Willard N. Westre, in 2012:**
   An integrated floor for an aircraft fuselage includes a composite panel forming a floor surface and composite beams bonded to the floor panel. The beams extend longitudinally within the fuselage and support the floor.

ISSN (O): 2393-8609

International Journal of Aerospace and Mechanical Engineering

Volume 2 – No.6, December 2015

3. PROBLEM DESCRIPTION

We are given an I-beam placed at the two end-points of longerons in the fuselage. These beams are installed to prevent failure of longerons due to cyclic loading. Thus, I-beam should be able to carry the load coming from fuselage. The problem is to analyze this I-beam under the given load and check for buckling, failure and factor of safety.

4. LOADING CONDITIONS

Fuselage (or cabin) pressurization of a transport aircraft induces hoop and longitudinal stresses in the fuselage. passengers. An unstiffened, or monocoque, fuselage would carry this internal pressure load as a shell in membrane response, like a pressure vessel. However, internal longitudinal and transverse stiffeners are necessary to carry the loads resulting from flight maneuvers, landings, and ground handling, etc. The longitudinal stiffeners, called stringers or longerons, carry the major portion of the fuselage bending moment. The load is also transferred from fuselage floor to longeron. The longerons here are attached to the I-beam, and thus, all the load from longerons will be transferred to I-beams. In this case, beam receives a shear load of value 4200 N. Due to this shear load, I-beam experiences both axial load and bending moment. Therefore in stress analysis, we find total direct stress due to both of these.

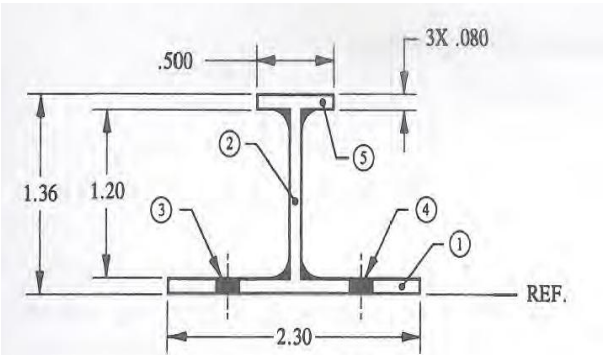

5. MATERIAL

Name of material	Young's Modulus	Yield Strength	Poisson's Ratio	Ultimate Strength
Aluminum 2024-T42	73 GPa	324MPa	0.33	469MPa

Aluminum alloy 2024 was introduced by Alcoa in 1931.Compossion of this alloy is aluminum (91%), copper (4%), magnesium (2%) and other metals. Due to its high strength and fatigue resistance, 2024 is widely used in aircraft structures, especially wing and fuselage structures under tension. The beam would not fail or fracture easily and would be able to support longeron. Thus, we use Aluminum 2024 material for the beam.

6. BOUNDARY CONDITIONS

As shown in the diagrams below, I-beam is fixed on both sides and is attached to the fuselage shell with the help of brackets. The lower flange of the beam is riveted to the longerons and hence, load of value 4200 N is transferred from longerons to I-beam.

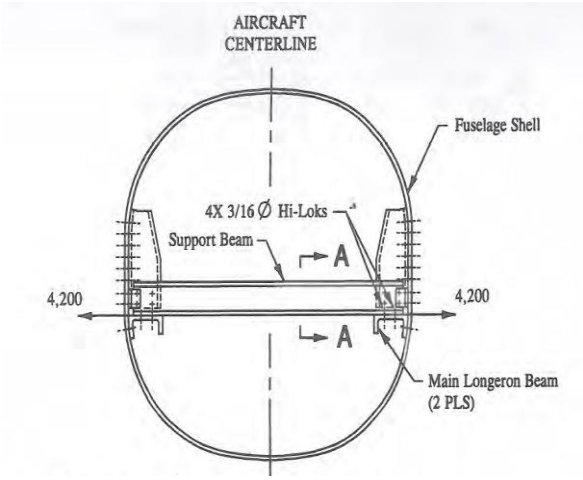

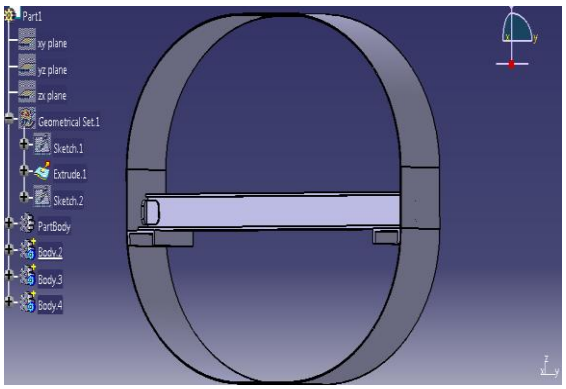

7. CALCULATIONS

Excel sheet is used to calculate loads and stresses. Proof stress, Young's modulus and ultimate stress of the material used I.e. Aluminum 2024 are taken in consideration. Our main purpose is to find out the values of direct stress and bending stress without failure. For this, first of all we calculate the Moment of Inertia (I) of the beam with the help of given dimensions. The direct stress is calculated by dividing the axial load (4200 N) by the total area of the I-beam. The bending stress is simply My/I where M is Bending moment, y is the distance of centre of gravity. Combined equivalent stress will be the sum of these two stresses as we don't have any torsion. For the design to be able to withstand all the factors, the equivalent stress should be less than yield stress. Factor of safety w.r.t. ultimate stresses is also calculated. We can check for buckling by comparing the critical load with the load given i.e. buckling load should be greater than design compressive load.

ISSN (O): 2393-8609

International Journal of Aerospace and Mechanical Engineering

Volume 2 – No.6, December 2015

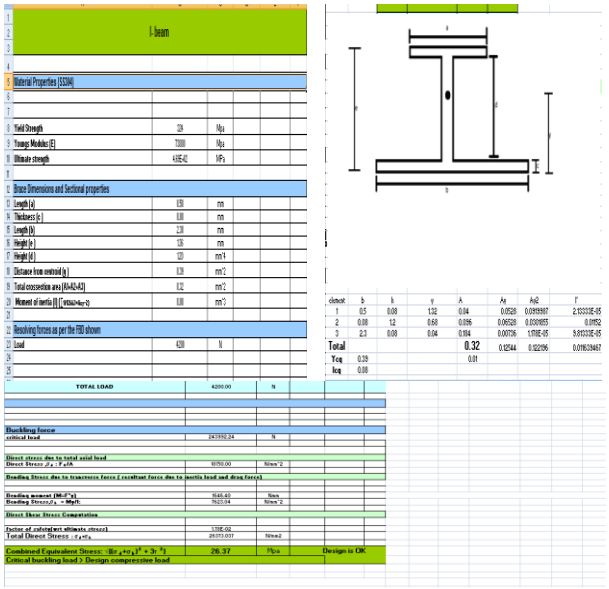

1	I-beam									
2										
3										
4										
5	Material Properties (SS304)									
6										
7										
8	Yield Strength	224	Mpa							
9	Youngs Modulus (E)	73000	Mpa							
10	Ultimate strength	4.55E-02	MPa							
11										
12	Brace Dimensions and Sectional properties									
13	Length (a)	150	mm							
14	Thickness (c)	0.08	mm							
15	Length (b)	2.3	mm							
16	Height (e)	1.6	mm							
17	Height (d)	1.2	mm^4							
18	Distance from centroid (y)	0.38	mm^2							
19	Total cross-section area (A1+A2+A3)	0.32	mm^2							
20	Moment of inertia (I) [(1/12)(a^3*c)+(b^3*c)]	0.00	mm^3							
21										
22	Resolving forces as per the FBD shown									
23	Load	4200	N							
24										
25										
	TOTAL LOAD	4200.00	N							
	Buckling force									
	critical load	243992.24	N							
	Direct stress due to total axial load									
	Direct Stress, σ_d = P/ρA	18750.00	N/mm^2							
	Bending Stress due to transverse force (resultant force due to inertia load and drag force)									
	Bending moment (M=F*a)	1646.40	Nmm							
	Bending Stress, σ_b = Mρ/I:	7623.04	N/mm^2							
	Direct Shear Stress Computation									
	Factor of safety(wrt ultimate stress)	1.39E-02								
	Total Direct Stress, σ_d+σ_b	26373.037	N/mm2							
	Combined Equivalent Stress: √(σ_d+σ_b)^2 + 3τ^2)	26.37	Mpa	Design is OK						
	Critical buckling load > Design compressive load									

element	b	h	y	A	Ay	Ay2	I'
1	0.5	0.08	1.32	0.04	0.0528	0.0919987	2.13333E-05
2	0.08	1.2	0.68	0.096	0.06528	0.0331057	0.01152
3	2.3	0.08	0.04	0.184	0.00736	1.17E-05	5.81333E-05
Total				0.32	0.12544	0.122196	0.011634667
Ycg	0.38			0.01			
Icg	0.00						

8. RESULT

After calculations, the values of stress are:-

- Critical Load :- 243992.24N
- Direct stress: 18750 N/mm2
- Bending Moment:- 1646.40 N mm
- Bending Stress:- 7623.04 N/mm2
- Total direct stress:- 26373.037N/mm2
- Equivalent Stress:- 26.37Mpa.

9. CONCLUSION

From the above calculations, it can be inferred that the I-beam is not buckling as the critical load is very high as compared to the load given. It can easily withstand the load coming from other parts of fuselage as combined equivalent stress's value is less as compared to the yield stress. Hence, I-beam can be used to support the longerons and we can avoid failure due to cyclic loading on longerons.

10. REFERENCES

[1] Fuselage floor bearing carcass and its support beam

[2] Patent US2242199A by Woods Robert J in 1941.

[3] Roark's formula

[4] Michael C. Y. Niu

[5] Floor structure for fuselage; patent CA 2646005A1 by Thorsten Schroeer in 2007

[6] Load Transfer in the Stiffener-To-Skin Joints of a Pressurized Fuselage by Eric R. Johnson and Naveen Rastogi