ISSN (O): 2393-8609

International Journal of Aerospace and Mechanical Engineering

Volume 3 – No.1, February 2016

Computational Fluid Dynamics of Wing

Avi Gulati
Student, B.Tech, Department of Aerospace Engineering
University of Petroleum and Energy Studies, Dehradun, Uttarakhand, India
avigulati7@gmail.com

Divam Gupta
Student, B.Tech, Department of Aerospace Engineering
University of Petroleum and Energy Studies, Dehradun, Uttarakhand, India
divamgupta1994@gmail.com

Prabhansh Varshney
Student, B.Tech, Department of Aerospace Engineering
University of Petroleum and Energy Studies, Dehradun, Uttarakhand, India
varshneyprabhansh@gmail.com

ABSTRACT
The objective of the project was to design the wing surface in CATIA V5 and analyze it using the software called ANSYS. Aim is to determine the lift and drag over a Wing. Wing structure is made of various airfoil shapes such as NACA 4, 5 and 6 series airfoils. In our case, NACA 4 series airfoil was used namely NACA 4412. Terms for lift and drag coefficient of Wing using ANSYS software are generated.

General Terms
CATIA V5, ANSYS, CFD, FLUENT

Keywords
Wing surface, Lift, Drag, Pressure, CFD, Airfoil

1. INTRODUCTION
Wing is the most important part of the aircraft, which produces the lift due to the pressure difference generated on the upper and the lower surface. The wing has different types of structural components such as Spars, Stringers, Ribs and Skin which are necessary for the strength of the wing. The main function of these is to distribute the payload and the forces which act on the aircraft wing including shear forces, tensile forces and direct forces.

2. METHODOLOGY
These days analysis is done with the help of CAD, FEM and simulation runs. With the help of these methods more interactive and efficient response comes out. Software like ANSYS, NASTRAN-PATRAN, etc. are used in aerospace industry because effectiveness. We examine results by using a computational fluid dynamics in ANSYS software.In this first make a Catia model of Wing surface of airfoil (Wing Cross-section) NACA 4412 and then flow analysis of wing surface in ANSYS by generating Meshing first and then giving boundary conditions and initializing the result for 100 iterations. By doing so we get the velocity vector, pressure contour, path lines and velocity streamline and also lift force and drag force in Y and X direction respectively.

2.1 CATIA V5
CATIA V5 (Computer aided three dimensional interactive application) is a predominant solver which makes a conceptual design or a prototype at less time consuming rate. It is mainly used in automotive, aerospace, shipping and other industries. There are many workbenches are available to construct a geometry in CATIA V5 such a product, part, sheet metal, surface etc. It supports different type of stages in computers:-

- CAD (computer aided design)
- CAE (computer aided engineering)
- CAM (computer aided manufacture)

2.2 ANSYS
ANSYS simulation software is used to the most challenging engineering problems. It is very user friendly and easily understandable. Several industries are able to determine static structural analysis, linear and non-linear analysis, buckling analysis, explicit dynamics, computational fluid dynamics, electromagnetic and hydrodynamics etc. ANSYS CFD is used for testing data by simulating fluid flow.

3. DESIGN AND DETAILS
Construction of Wing Surface in CATIA V5:-

- Import the points of Airfoil (NACA 4412) in Catia V5 from MS Excel.
- Join all the points using spline (Generative shape design) starting from Trailing edge.
- Scale the airfoil in YZ plane and XZ plane of ratio 1000 using scaling command.
- Rescale the airfoil in YZ plane and XZ Plane of taper ratio of 0.6 using scaling and shift that airfoil in XY plane at a distance of 3000mm using translate command.
- Select the Multi-section surface command for wing skin by selecting both the airfoils.
- For the Analysis the entire surface should be closed.
- Select the fill command to fill the entire surface of scaled airfoil and translate airfoil.

ISSN (O): 2393-8609
International Journal of Aerospace and Mechanical Engineering
Volume 3 – No.1, February 2016

- Use the join command to make one surface by selecting both the airfoils and multi-section surface.

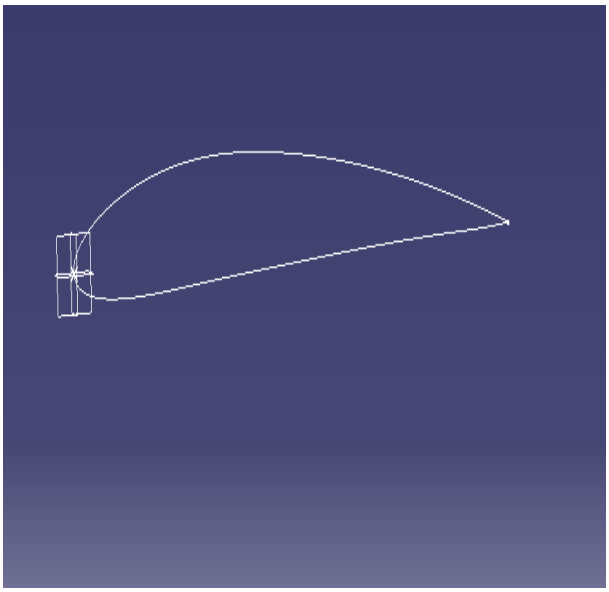

NACA Airfoil (4412)

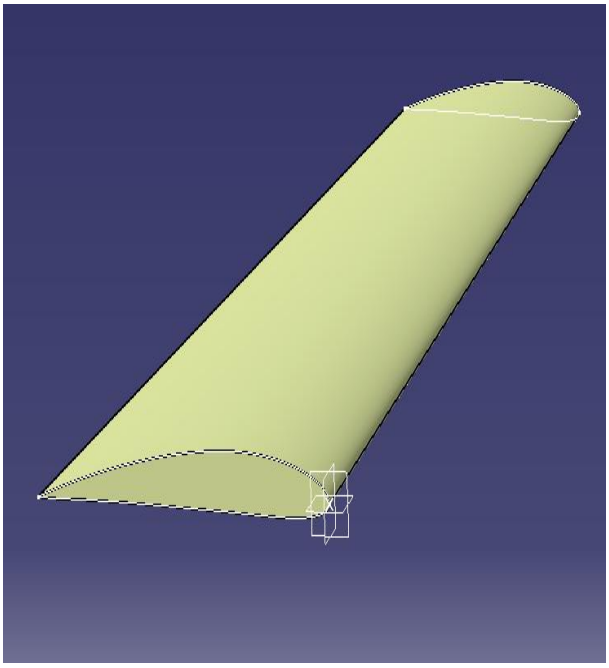

- Make the rectangle over the whole surface and pad it up to that extent so that it covers the whole surface.
- Use the split command by selecting join surface and make sure that the direction is outward.

4. COMPUTATIONAL FLUID DYNAMICS

- CFD model is generated by importing from CATIA V5.
- Generate mesh.

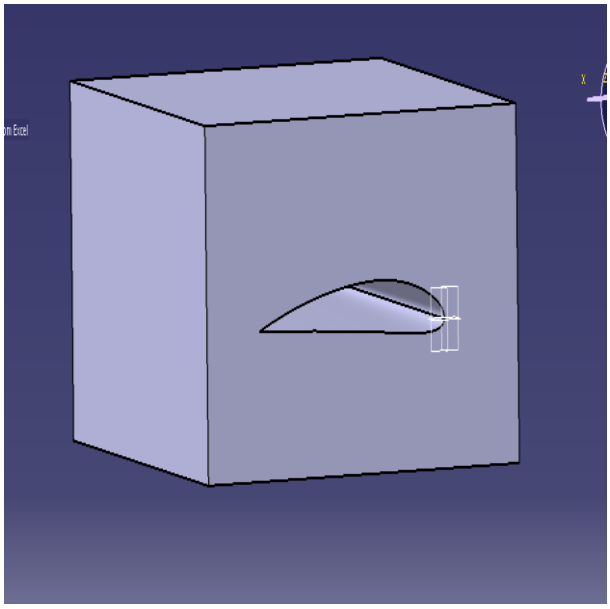

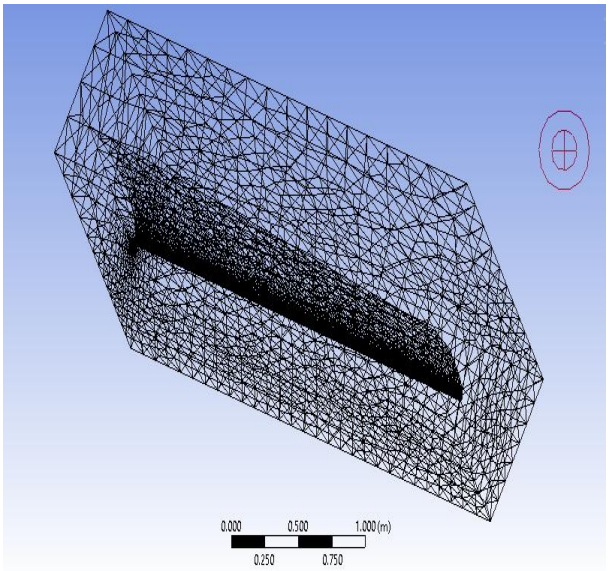

Meshing

- Boundary condition on working principles is applied in ANSYS and also the name selection where the fluid is moving throughout the section is mentioned.

Zone/Region	Type
Inlet	Velocity inlet
Outlet	Pressure outlet
Wall	Wall
Symmetry	Symmetry

ISSN (O): 2393-8609

International Journal of Aerospace and Mechanical Engineering

Volume 3 – No.1, February 2016

Wing	Wall

- Consider the velocity of fluid particles to be 100m/s.
- Consider all data from inlet.
- In order to represent parameters such as velocity vector, pressure contour and path lines which could be introduced when process occurs.

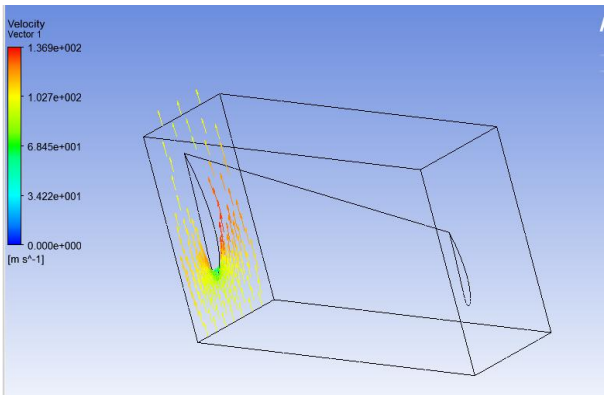

Velocity vector

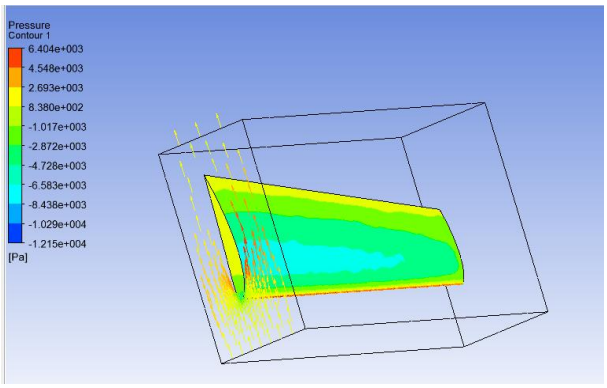

Pressure contour

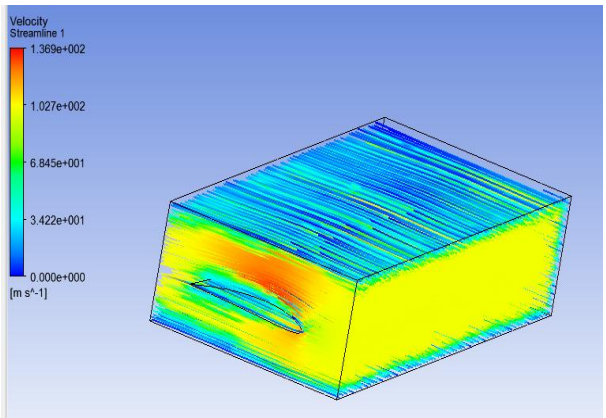

Velocity Streamlines

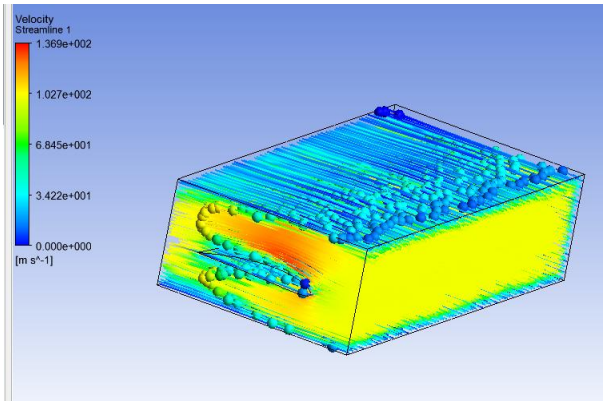

Animated streamline flow

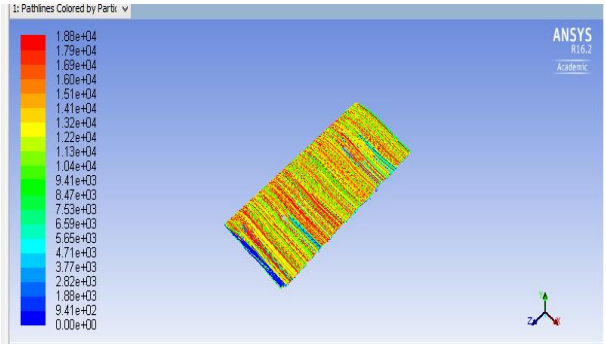

Path lines

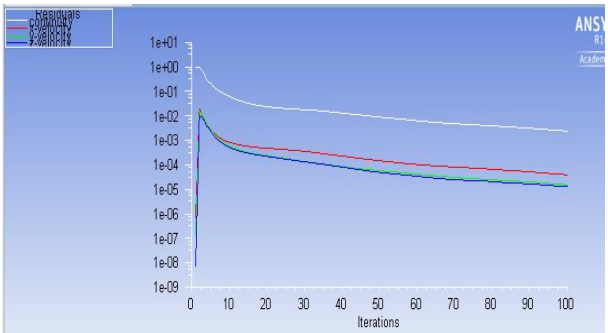

4.7 Scaled residuals

5. RESULTS

Simulation runs automatically when input is given to the solver. We study a Wing of airfoil NACA 4412 and examine results during process. It comes out to be lift is 6575.29(N) and drag is 180.862(N). Lift is much more value as compared to the drag.

6. REFERENCES

[1] http://m-selig.ae.illinois.edu/ads/coord/naca4412.dat

[2] "COMPUTATIONAL FLUID DYNAMICS OF REFLEX AIRFOIL" International Journal of Aerospace and Mechanical engineering Volume 2-No.6, October 2015

[3] https://en.wikipedia.org/wiki/CATIA

[4] https://en.wikipedia.org/wiki/Ansys