ISSN (O): 2393-8609

International Journal of Aerospace and Mechanical Engineering

Volume 4 – No.3, August 2017

PARAMETRIC STUDY ON IMPELLER EXIT BLADE WIDTH VARIATION ON CENTRIFUGAL COMPRESSOR PERFORMANCE

Aishwarya Singh Rathore
Department of Aerospace Engineering, SRM University, Chennai, India

K. B. Ravichandrakumar
Department of Aerospace Engineering, SRM University, Chennai, India

ABSTRACT

The work addresses an imperious issue of enhancing centrifugal flow compressor performance by modifying the impeller blade design. Recent advancements have reported in enhancement of centrifugal compressor performance by the impeller with extended shroud by 10%. Present work extends to explore the significance geometric and design parametric variation of varying exit blade width and its implications on the compressor performance. Numerical simulations were carried out for the selected cases of extended shroud by 10% along with the width at exit blade width increased by 5% and 10%. The numerical predictions were validated with the compressor theory and matched reasonably well. Results indicates higher static pressure rise with reduced losses and increased efficiency with exit blade width variation. The stagnation pressure distribution increases at exit of diffuser due to rotating vaneless diffuser. The presence of rotating vaneless diffuser yields smooth entry flow profiles, thereby improving the performance of centrifugal compressor.

KEYWORDS

Centrifugal compressor, Impeller, Shroud extend, Exit blade width, Vaneless diffuser.

Nomenclature

b	Blade Width(m)
ω	Rotational Speed(rev/min)
n	Number of Blades
P0	Total Pressure (Pa)
r	Radius(m)
η	Efficiency
σ	Slip Factor
T0	Total Temperature
γ	Specific Heat Ratio
Cp	Specific Heat at Constant pressure
X	Span Normalized

Subscripts

1	Inlet
2	Exit of Impeller
3	Exit of Diffuser

Abbreviations

ES10	Extended Shroud by 10%(base model)
EW5	Extended Width by 5%
EW10	Extended Width by 10%

1. INTRODUCTION

Compressors are essential turbo machines with wide range of practical, functional, scientific and engineering applications. The compressors are largely classified on the basis of mode of operation viz., axial flow compressor and centrifugal flow compressor. In contrast to the axial compressors, where the flow deviation in the radial direction is negligible, the centrifugal compressor is based on large radial shift between the inlet and outlet of the impeller. Owing to the larger impeller exit radius than the inlet, the centrifugal compressor outcomes in a lower mass flow rate per frontal area resulting in increased drag which is of the critical concern to the aircraft propulsion system designers. However, in low-speed applications where the drag penalty is less significant, centrifugal compressors stretch the advantage of high-pressure ratio per stage and construction that is less prone to structural failure. Centrifugal compressors are widely used for Industrial, Automotive Turbo charging applications, APUs (auxiliary power units) to start the engines and provide power to low altitude aircraft, in pipeline compressors of natural gas to move the gas from the production site to the consumer, In oil refineries, natural gas processing, petrochemical and chemical plants. Air-conditioning and refrigeration and HVAC, In industry and manufacturing to supply compressed air for all types of pneumatic tools. In air separation plants to manufacture purified end product gases. In oil field re-injection of high pressure natural gas to improve oil recovery.

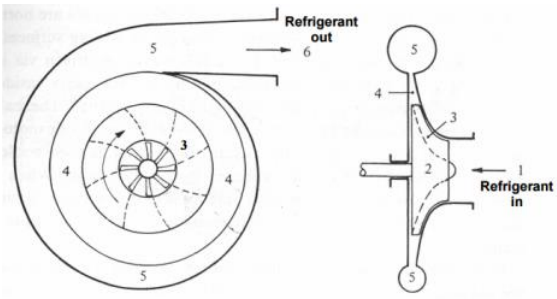

Fig. 1: Schematic of Centrifugal Compressor working principle.

The total pressure ratio of a single-stage centrifugal compressor may be as high as 10–12 in comparison to an axial compressor stage producing around 1.6–2.0. The significant features of the centrifugal compressor have necessitated active research efforts to enhance performance and utility. Figure 1 details the working of a centrifugal flow compressor where, the flow enters in the axial direction and leaves in radial direction. Low-pressure fluid enters the compressor through the eye of the impeller (1). The impeller (2) consists of number of blades, which form flow passages (3) for fluid. From the eye, the fluid enters the flow passages formed by the impeller blades, which rotates at very high speed. As the fluid flows through the blade passages towards the tip of the impeller, momentum is imparted to it by the

rotation of the rotar and its static pressure also increases. From the tip of the impeller, the fluid flows into a stationary diffuser (4). In the diffuser, the fluid is decelerated and as a result of which the dynamic pressure drop is converted into static pressure rise, thus increasing the static pressure further. The vapour from the diffuser enters the volute casing (5) where further conversion of velocity into static pressure takes place due to the divergent shape of the volute. Finally, the pressurized fluid leaves the compressor from the volute casing (6).

The impeller is an essential rotating component which imparts energy to the fluid by the rotation of curved and twisted blades. The impeller geometry is broadly of three types viz., Radial, Forward-leaning and Backward-leaning (or backswept). The impeller offers radial passages to accelerate the fluid in the rotor and ideally attain a radial exit flow. The forward-leaning impeller geometry accelerates the fluid in a spiral passage leaning in the direction of the rotor rotation. The backswept impeller is composed of spiral passages that direct the flow in the opposite direction to rotor rotation. The initial curvature and twist in the impeller, also known as the inducer section encounters the incoming flow at its relative flow angle and turn the relative flow toward the axial direction before it changes its path to radial direction. This in turn results in increased fluid static pressure in the passage owing to fluid deceleration. The inducer exit flow is decelerated radially outward, by the action of centrifugal force on the fluid in the spinning impeller (vaned) passages. Centrifugal compressor signifies the pressure rise produced by the centrifugal force. The radially pumped flow from the impeller exit is decelerated through a radial and vaned diffuser, and turned back toward the axis of rotation for either the next compressor stage or the combustion chamber. As widely known, any ducting that involves turns is a source of pressure loss (total) making multistaging cumbersome with lower efficiency as compared with axial-flow compressors. The impeller exit flow is highly non-uniform. Therefore, the one-dimensional approximations that we often make need to be modified to achieve the non-uniform flow behavior. Alongside, the boundary layer on the suction surface near the impeller exit is mostly separated. The combined effects of wake and separated flow are very likely to rise to a high level of blockage at the exit.

Following the classical numerical work of Gao et. al., [1] on "Influence of Tip Clearance on the Flow Field and Aerodynamic Performance of the Centrifugal Impeller". The work explored the influence of the tip clearance on the 3D viscous flow field and performance of the NASA Low-Speed Centrifugal Compressor(LSCC) impeller with a vaneless diffuser. The computations were performed under several operating conditions with four different tip clearance sizes (0. 0%, 50%, 100% and 200% design tip-clearance). The numerical results showed that the through flow wake are considerably influenced by the tip clearance and there possibly exists an optimum size of the tip clearance which is not the zero-tip clearance to make the flow loss minimized. Murray [2] investigated the Effects of Impeller-Diffuser Interaction on Centrifugal Compressor Performance using unsteady 3D Reynolds averaged Navier-Stokes simulations. The computed results showed that the interaction between the downstream diffuser pressure field and the impeller tip clearance flow can account for performance changes in the impeller. The magnitude of the performance change due to this interaction was examined for an impeller with varying tip clearance followed by a vaneless diffuser. The impact of unsteady impeller-diffuser interaction was reflected through a time averaged change in impeller loss, blockage and slip. The results stated that there exists a tip clearance where the beneficial effect of the impeller-diffuser interaction on the impeller performance is at a maximum. Govardhan et. al., [3] examined the effect of forced rotating Vaneless diffusers on Centrifugal Compressor Stage Performance. They noted that non-uniform flow at the exit of the centrifugal impeller mixes in the vaneless space of the diffuser causing a rise in static pressure as well as significant loss of total pressure resulting minimized efficiency. The work conceived forced rotating vaneless diffuser involving the concept of blade cutback and shroud extension. Systematic computations were carried out for the effects of blade cutback of 5%, 10% and 20% of vane length and shroud extension of 10%, 20%, 30% and 40% of impeller tip diameter and impeller without shroud extension on flow diffusion. The performance characteristics of various blade cutback configurations were found less in terms of efficiency, energy coefficient as well as static pressure rise. Study reported that the objective of obtaining higher static pressure rise with wide operating range and reduced losses over stationary vaned diffuser can be achieved by shroud extension of 30%, followed by shroud extension of 20%. Seralathan et. al., [4] examined Free Rotating Vaneless Diffuser of varying Diffuser Diameter Ratio with Different Speed ratios and its effect on Centrifugal Compressor Performance Improvement. Study comprised of the impeller with a stationary vaneless diffuser of diffuser diameter ratio 1.40 and impeller with a free rotating vaneless diffuser of diffuser-diameter ratio 1.30 along with stationary vaneless diffuser at downstream for the remaining radius ratio, running at speed ratios 0.25 and 0.75 times the impeller rotational speed. The study reported a higher static pressure rise with reduced losses. An extension of the work by same authors [5] tested Modification of Centrifugal Impeller and effect of Impeller extended shrouds on Centrifugal compressor performance. The effect of extended shroud by 10% with impeller exit diameter were analyzed on flow diffusion and performance and compared with the stationary vaneless diffuser. The study highlighted reduced losses, enhanced efficiency and higher static pressure rise by shroud extension. The scientific contribution was further extended to the performance enhancement of a low-pressure ratio Centrifugal compressor stage with a rotating vaneless diffuser by Impeller disk extended shrouds [6]. The study reported the effect of rotating vaneless diffuser based on shroud extension concept on flow diffusion, performance and flow parameters in a centrifugal compressor stage at design and off design flow conditions. Rotating vaneless diffuser was formed by extending the impeller disks by 40% above the impeller exit diameter. Static pressure rise in RVD-ES configuration was found to be higher and the energy coefficient noted to improve by 57.14% for RVD-ES compared to SVD over the entire flow range. Swain [7] investigated the impact of Impeller Blade Trimming on the performance of Centrifugal compressors. Four impellers of varying geometries, speeds were modeled and performance characteristics were noted to understand the effects and limits of modifying the impeller geometry by either flow or axial trimming. Flow trimming was found to be capable of reducing the flow coefficient significantly by 20%–50% while maintaining the pressure ratio and efficiency of the baseline impeller. The suitability of an impeller for flow trimming was found to correlate strongly with flow incidence angle. Axial trimming was recommended to be employed to reduce the pressure ratio to between 9% and 13% of the baseline pressure ratio before choking in the passage reduced the effective flow range. Impeller performance was found to

ISSN (O): 2393-8609
International Journal of Aerospace and Mechanical Engineering
Volume 4 – No.3, August 2017

respond differently to axial trimming based on the diffusion ratio of the baseline impeller. Marconcini et. al., [8] estimated the Aerodynamic Force Induced by Vaneless Diffuser rotating stall in Centrifugal compressor stages. The results of a 3D-unsteady simulation of a radial stage model were used to estimate the stall force and to compare it with the approximation obtained with an "experimental-like" approach. Results showed that the experimental approach, using an ensemble average approach for transposing data between time and space domains provides sufficiently accurate results and the momentum contribution, neglected in experiments, gives negligible contribution to the final intensity of the stall force. In recently, Seralathan et. al., [9] carried out studies on the effect of diffuser rotational speeds on low pressure ratio centrifugal compressor performance at off-design and design flow coefficients. Four different rotational speeds were selected for the rotating vaneless diffuser. Free type rotating vaneless diffusers were rotated at speed ratios SR0.25, SR0.50 and SR0.75. It was found that the total temperature of the fluid at stage exit increases with increase in rotational speeds of the free rotating vaneless diffuser which affected the efficiency of free rotating vaneless diffusers. Smaller flow angles resulted in a shorter flow path length thereby substantially reducing the frictional losses. Gain in stagnation pressure was observed for all free rotating vaneless diffuser configurations. The rotational speeds determine the extent of net gain in energy level of the fluid and drop in total pressure losses. Based on static and stagnation pressure distributions at stage exit, the flow was observed to undergo a comparatively better diffusion process. The result reinstated that the efficiency of diffusion process in a compressor stage with free rotating vaneless diffuser is better at speed ratio above 0.50 and above that the rotating vaneless diffuser behave like a forced type. Based on the, it was understood that an optimum rotational speed of the rotating vaneless diffuser plays an important role in facilitating the effective diffusion process within the diffuser passage.

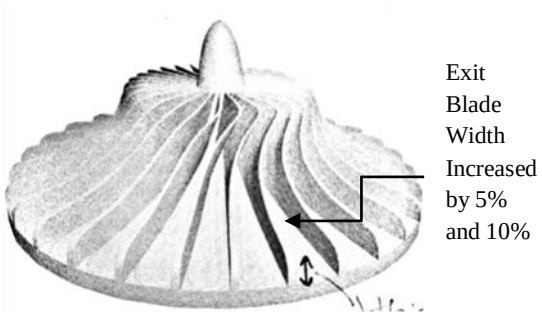

Fig. 2: Schematic of Centrifugal compressor impeller

Appreciable work had been done on the effect of impeller with extended shroud for its effect on centrifugal compressor by forming a forced rotating vaneless diffuser. As the inspiring effect is already established however, the quantification of the extended shroud is yet to be comprehensively done to obtain optimized centrifugal compressor efficiency. The specific objective of the present work is to investigate the effect of varying impeller exit blade width on compressor performance (please see figure 2). The results will be compared with the existing models to note the increase in the efficiency as well higher pressure rise at exit of compressor.

2. SIMULATIONS AND SOLUTION METHODOLOGY

The numerical analysis is carried out using standard CFD software ANSYS 16. Figure 3 shows the schematic of centrifugal compressor impeller blade, with inlet, impeller exit, diffuser exit, the blade exit width along with the selected modifications viz., increase by 5% and 10% respectively.

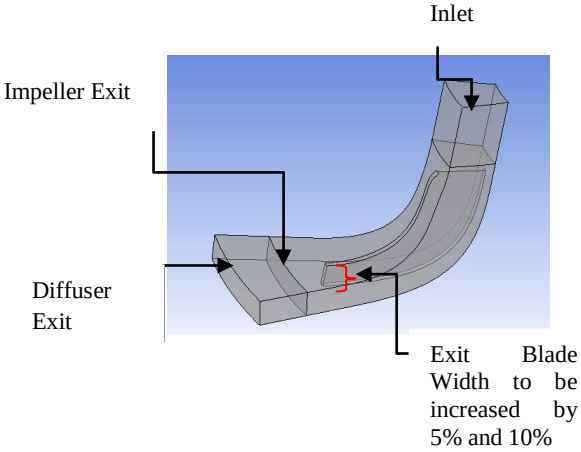

Fig. 3: Centrifugal Compressor Impeller Blade

The base model of an impeller blade is adapted from Seralathan et. al., [5] and is modified with necessary changes for the computational predictions. The geometric parameters of a centrifugal compressor impeller blade are adapted from Seralathan et. al., [5]. The details of the modified new model are given in the table given below (please refer table 1). The exploration is systematically undertaken as:

a) Modeling and Flow analysis of the base model.

b) Modeling and Flow analysis of modified models.

c) Theoretical calculations for Flow parameters involved.

d) Validation of Theoretical calculations with the numerical predictions.

Emphasis is put on the essential flow analysis in order to observe the variation in total pressure for all the three models and the effect on overall isentropic efficiency achieved by the impeller blade. Geometry of the impeller blade is created in ANSYS 16 using bladegen. All dimensions for different models as given in table above are given in blade gen itself. Thickness of the blade, angles as well as number of blades are also given in this component system itself. Meshing of the model is done using Turbo grid. Model from bladegen is transferred to turbo grid. Prism shaped cells are introduced to obtain a finer resolution in the boundary layer. The Y+ value for generated mesh near the wall zones is maintained according to the turbulence modeling requirements.

ISSN (O): 2393-8609

International Journal of Aerospace and Mechanical Engineering

Volume 4 – No.3, August 2017

Impeller			Stationary Vaneless Diffuser(SVD)	
Diameter at exit of the impeller	D2	570mm	Diffuser Diameter Ratio D4/D3	1.40
Diameter at inlet of the impeller	D1	215.2mm	Diffuser outlet diameter D4	798mm
Outer diameter to inner diameter ratio	D2/D1	2.649	Diffuser inlet diameter D3	570mm
Diameter at exit of the impeller (disk)	D2(disks)	570mm	**ES10**	
Diameter at exit of the impeller	D2(blade)	570mm	D2(blade)	570mm
Number of blades	z	18	D2(disks)	627mm
Width of the blade at exit	b2	27.6mm	D3	627mm
Width of blade at inlet	b1	58.5	D4	798mm
Thickness of the blade	T	6mm	**EW5**	
Blade angle at the inlet	β1	44.6°	Width of the blade at exit	28.98mm
Blade angle at the exit	β2	90°	**EW10**	
Rotational speed of the impeller	N	1500rpm	Width of the blade at exit	30.36mm

Table 1: Geometric dimensional details

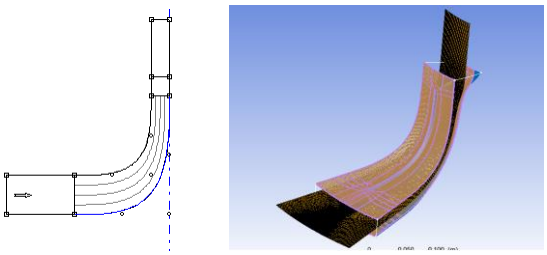

(a)

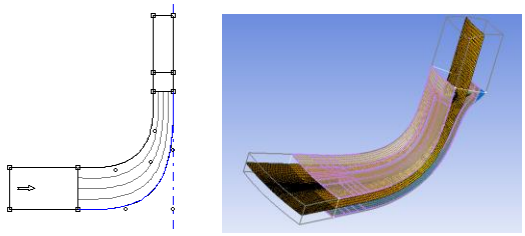

(b)

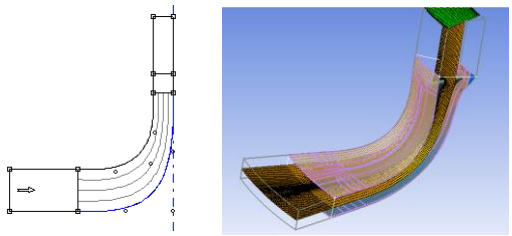

(c)

Fig. 4: Blade Design and Mesh View of (a) ES10, (B) EW5 and (c) EW10 Model

Figure 4 shows the blade design and mesh view for **ES10** (the base model that is for extended shroud by 10%), **EW5** (modified model for extended blade width by 5%) and **EW10** (modified model for extended width by 10%). The simulations were carried out for air at 25°C with reference pressure as 101.325kPa with rotating domain motion at 1500 rpm. The total energy model is the heat transfer model used along with k-ω for turbulence. Total pressure in stationary frame is chosen as boundary condition at the inlet with 0 Pa as relative pressure. Turbulence intensity with medium level at inlet was kept as 1%. Total temperature in stationary frame was given as 25°C. Mass flow rate of 2 Kg/sec was given as boundary condition at the outlet. No slip conditions are enforced on the walls and wall roughness is neglected by assuming it as a smooth wall. Heat transfer condition is taken as adiabatic. The vaneless diffuser is mentioned as counter rotating. Rotational periodicity interface is given for the sidewalls of inlet, outlet and passage with rotation axis about z-axis (Refer figure 6).

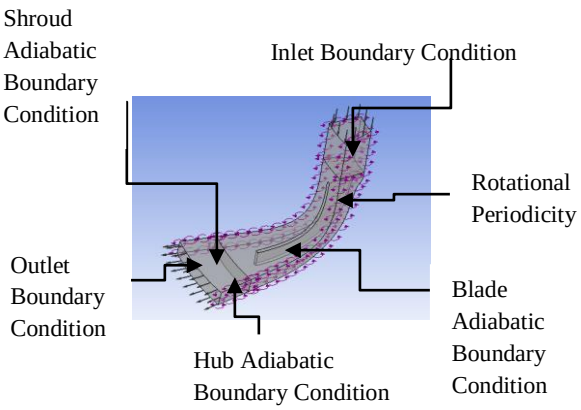

Fig. 5: Boundary Conditions given for selected Impeller Blade profiles

ISSN (O): 2393-8609

International Journal of Aerospace and Mechanical Engineering

Volume 4 – No.3, August 2017

3. RESULTS AND DISCUSSION

The theoretical calculations are done assuming 100% efficiency as shown below. The flow is assumed to be laminar, so no effect of turbulence is taken into consideration.

Theoretical Work Done on Air by the Blade

$$W.D. = \sigma(r2\,\omega)^2$$

$$W.D. = \left(1 - \left(\frac{0.63 * \pi}{n}\right)\right)(r2\,\omega)^2$$

$$W.D. = \left(1 - \left(\frac{0.63 * \pi}{18}\right)\right)(0.3135 * 1500)^2$$

$$W.D. = 196810.2056J$$

Total Pressure Ratio

$$\frac{P03}{P01} = \left(1 + \left(\frac{\eta(T03 - T01)}{T01}\right)\right)^{\frac{\gamma}{\gamma-1}}$$

Where, η=100%=1

T01=25°C

γ (for air at 25C) = 1.401

To find T03,

$$T03 = T01\left(1 + \left(\frac{\omega * r2 * Cw2}{Cp * T01}\right)\right)$$

$$T03 = 25\left(1 + \left(\frac{1500 * 0.3135 * 0.89}{1004 * 25}\right)\right)$$

$$T03 = 25.42°C$$

$$\therefore \quad \frac{P03}{P01} = \left(1 + \left(\frac{1*(25.42-25)}{25}\right)^{\frac{1.401}{0.401}}\right)$$

$$\frac{P03}{P01} = 1.0599$$

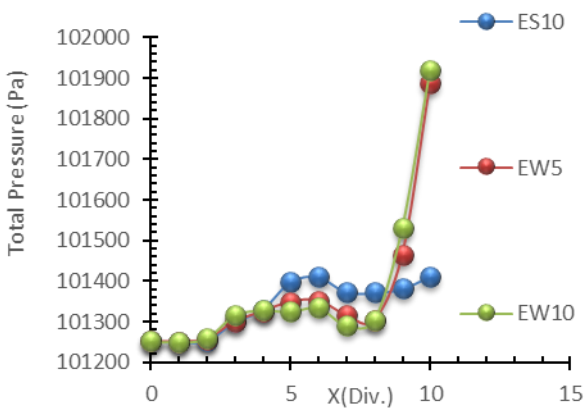

Fig. 6: Plot of Total Pressure (Pa) vs. Different locations taken starting from inlet to exit of diffuser (X in div) for all the three models

Figure 6 shows the variation of Total Pressure throughout the passage of blade starting form inlet to the exit of the diffuser. Ten divisions are being taken starting from inlet to outlet where average total pressure value is taken and plotted. Looking at the plot one can note that the blue curve shows pressure variation along different divisions for extended shroud by 10% (base model) followed by the red and green curves representing extended width by 5% and extended width by 10% respectively. Since the inlet pressure is at atmospheric condition, all curves start from the same point and after 2 divisions, the pressure values start changing. The change indicates the flow redirecting owing to the presence of blade. This establishes the very fact that considerable changes in the blade design parameters affect the flow parameters. As the exit width of blade is increased by 5% and 10%, the results show that the maximum total pressure at exit of diffuser is achieved by EW10 model followed by EW5 and ES10 respectively (refer table 2). The reason for above mentioned change may be attributed to the fact that, as we increase the width at exit of blade, the clearance between the blade tip and the shroud wall is reduced, thus reducing the clearance loss, letting the air to get more pressurized. Consequently, more of the kinetic energy will be converted to the pressure energy at exit, and thus enhancing the performance of centrifugal compressor.

Total Pressure (Pa)	ES10	EW5	EW10
Inlet	101252	101252	101252
Outlet	101412	101887	101919

Table 2: Variation in Total Pressure at inlet and outlet for all the three models.

Table 2 highlights the pressure values at inlet and outlet of the impeller for all the three models. At inlet, the pressure given is atmospheric pressure however; the noted value is reduced proportionally because the air is sucked axially in before going to actually get influenced by the rotation making room for loss of pressure in the process. From the table, it is observed, that the highest pressure at outlet is achieved by EW10 model (101.919KPa) and then followed by EW5(101.887KPa) and ES10(101.412KPa).

Mode	Theoretic	ES10	EW5	EW10
Total Pressure ratio	**1.0599**	1.00301	1.00566	1.00577

Table 3: Theoretical as well as Software Pressure Ratio values for the Centrifugal Impeller.

Table 3 shows the comparison of the theoretical total pressure ratio with the numerical predictions.

Total pressure ratio is the ratio of total pressure at diffuser outlet to the impeller inlet. One can note that the total pressure ratio is greater that numerical predicted values. The reason for the deviation may be attributed to the fact that

ISSN (O): 2393-8609

International Journal of Aerospace and Mechanical Engineering

Volume 4 – No.3, August 2017

theoretical value is calculated by assuming 100% efficiency. The flow is assumed to be laminar, so no effect of turbulence is taken into consideration. Whereas in numerical predictions real conditions are simulated thus the flow will not be laminar so effect of turbulence and frictional losses will exist and thus reduced efficiency. Total pressure loss will exist in actual case, whereas no total pressure loss in case of theoretical condition. Also, it can be observed that maximum value for total pressure ratio is obtained for EW10 (1.00577), followed by EW5(1.00566) and ES10(1.00301). The significant rise in maximum total pressure rise in case of EW10 starting from inlet of impeller to outlet of diffuser and minimum total pressure rise results as the exit blade width thickness is increased, the clearance between the tip of the blade and shroud walls is reduced, which reduces clearance leakage.

To corroborate the results obtained, next we look at the flow pattern. Figure 7 shows the pressure flow in form of streamlines (red color region shows the high-pressure region with yellow region shows the low-pressure region and blue intermittent). Throughout the flow, it can be observed that high pressure region occurs at exit of impeller and so at the exit of diffuser. The flow is adjudged to be influenced by the blade rotation as not linear but curved.

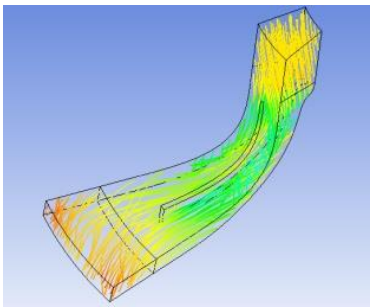

(a)

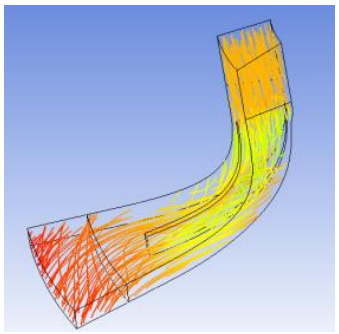

(b)

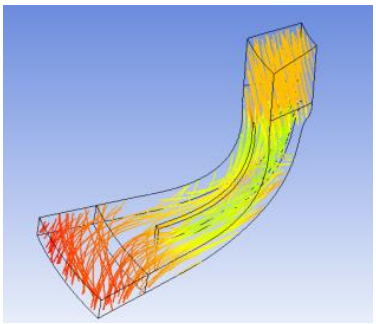

(c)

Fig. 7: Flow Pattern for (a) ES10 (b) EW5 (c) EW10 Model

Figure7(a) shows the streamline flow pattern for the base model that is extended shroud by 10%. As seen from the figure, the pressure region near exit of diffuser is not too high enough. Figure 7(b) shows the streamline flow pattern for modified model that is extended width by 5%. the pressure region near exit of the diffuser can be noted to be high enough than the base model. Figure 7(c) shows the streamline flow pattern for extended width by 10%. One can note that the pressure region near the exit of diffuser is highest as compared to the base model and the EW5 model. Furthermore, figure 8 shows the values of pressure at different radius segments, starting from inlet to the exit of diffuser for all the three models. Turbosurface is generated at equal distances from each other staring from inlet to the exit of diffuser. Average pressure value is generated for each and every surface and noted to see the variation in pressure and plot graph.

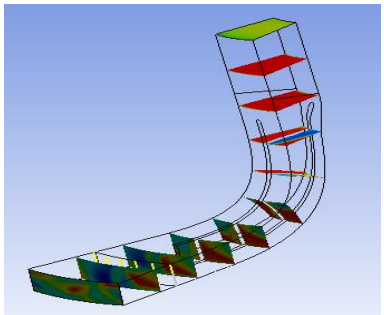

(a)

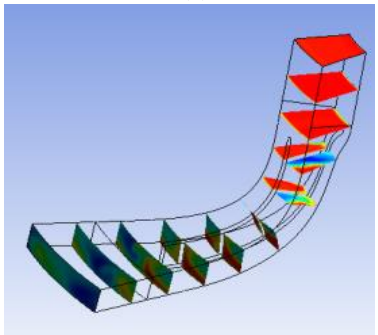

(b)

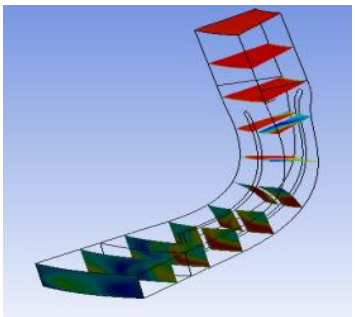

(c)

Fig. 8: Pressure Turbo Surfaces at Different Radius for (a) ES10 (b) EW5 (c) EW10

The gain in momentum is due to the transfer of momentum from the high-speed impeller blades to the fluid confined between the blade passages. The increase in static pressure is due to the self-compression of fluid caused by the centrifugal action. This is contrary to the gravitational effect, which causes the fluid at a higher level to compress the fluid below it due to gravity (or its weight). The static pressure achieved in the impeller is equal to the static head, which would be produced by an equivalent gravitational column.

4. CONCLUSION

A numerical parametric study was carried out with varying the impeller exit blade width. An established impeller blade model was adapted and modified in geometric parameters for the present study. Selected cases of 5% and 10% extended shroud were tested along with the base model. The pressure ratio obtained for base model was compared with the modified model for extended width by 5% and extended width by 10%. Based on the results it can be concluded that the better performance enhancement was achieved for extended width by 10%, followed by extended width by 5% and then by extended shroud by 10%. Total pressure ratio is increased by 0.265% for EW5 from the initial base model (ES10) and by 0.276% for EW10 from the initial base model. The changes results in reduced clearance between the tip of the blade and the walls which minimizes the leakage due to the clearance is reduced and hence the clearance loss is reduced. This results in reduced losses in total pressure rise, and in return enhancing the performance of centrifugal compressor. A centrifugal compressor performance is stated to be enhanced if the considerable amount of total pressure rise is achieved at the exit of the diffuser. Main goal of this research was to enhance the performance of centrifugal compressor by increasing the total pressure rise at outlet. With results, the requirements can be fulfilled by increasing the exit blade width in order to increase the performance of centrifugal compressor.

5. REFERENCES

1. Gao, Li-min, Wang, Shang-jin., “Influence of Tip Clearance on the Flow Field and Aerodynamic Performance of the Centrifugal Impeller”, Chinese journal of Aeronautics, Volume 15, Issue 3, 2002.
2. Murray, N. P., “Effects of Impeller-Diffuser Interaction on Centrifugal Compressor Performance”, Master of Science Thesis, Department of Aeronautics and Astronautics, MIT, US, 2003.
3. Govardhan, M., and Seralathan, S., “Effect of Forced Rotating Vaneless Diffusers on Centrifugal Compressor Stage Performance”, Journal of Engineering Science and Technology, Volume 6, Issue 5, 558 – 574, 2011.
4. Seralathan, S., and Roychowdhury, D. G., “Free Rotating Vaneless Diffuser of Diffuser Diameter Ratio 1.30 with Different Speed Ratios and its Effect on Centrifugal Compressor Performance Improvement”, 4th International Conference on Advances in Energy Research (ICAER)- 2013.
5. Seralathan, S., and Roychowdhury, D. G., “Modification of Centrifugal Impeller and Effect of Impeller Extended Shrouds on Centrifugal Compressor Performance”, International conference on design and manufacturing, 2013.
6. Seralathan, S., and Roychowdhury C. D. G., “Performance Enhancement of a Low-Pressure Ratio Centrifugal Compressor Stage with a Rotating Vaneless Diffuser by Impeller Disk Extended Shrouds”, Proceedings of the ASME 2014 Gas Turbine India Conference, GTINDIA2014, December 15-17, 2014.
7. Swain, D., “Impact of Impeller Blade Trimming on The Performance of Centrifugal Compressors”, PhD dissertation, Department of Mechanical Department, Michigan State University, 2014.
8. Marconcini, M., Bianchini, A., Checcuccia, M., Biliotti, D., Giachi, M., Rubino, D, T., Arnonea, A., Ferrari, L., and Ferrara, Giovanni., “Estimation of the Aerodynamic Force Induced by Vaneless Diffuser Rotating Stall in Centrifugal Compressor Stages”, 71st Conference of the Italian Thermal Machines Engineering Association, Turin, Italy, 14-16, September 2016.
9. Seralathan, S., and Roychowdhury C. D. G., “Numerical Studies on the Effect of Diffuser Rotational Speeds on Low Pressure Ratio Centrifugal Compressor Performance”, Journal of Applied Fluid Mechanics, Vol. 10, No. 3, pp. 785-799, 2017.