ISSN (O): 2393-8609

International Journal of Aerospace and Mechanical Engineering

Volume 4 – No.2, April 2017

AUTOMATIC GEAR SHIFTING MECHANISM IN TWO WHEELERS

Ambar Gupta
University of Petroleum and Energy Studies
21, Kila street Kashipur, Uttarakhand.
ambar1gupta@gmail.com

Kundan Kumar
University of Petroleum and Energy Studies
New area, beldari tola, mantu bhawan, gaya, bihar.
jkundanc@gmail.com

Abhishek Swarup
University of Petroleum and Energy Studies
Subhash Nagar, Ward No. 7, bazpur, Uttarakhand
abhishek.swarup96@gmail.com

Abhishar Rana
University of Petroleum and Energy Studies
376-7c, Baurari, New Tehri,Uttarakhand
Ranaabhishar1997@gmail.com

ABSTRACT
Motorcycles are widely used around the world particularly in INDIA. The gear shifting system of the motor-cycle is conventionally manual. This report covers development of an indigenous gear shifting /changing system for the standard motorcycle. By this system the manual mechanical gear-shifting will remain unchanged because an additional electro-mechanical system is placed on the top of the lever to shift the gear and automatically control the clutch. So the system has both the option manual as well as automatic. The system uses low cost microcontrollers to make the accurate decision for shifting the gear up and down by observing the speed, and it controls the clutch transmission where necessary. The complete hardware and software has been tested and the functioning of the automatic gear shifting system is verified. System is flexible and can be used with any motorcycle ranging from 50 to 200 cc.

General Terms
Automation.

Keywords
Linear Actuator, Arduino, Hall effect sensor, Atmega328, Servo motor, Gear shift lever

1. INTRODUCTION
There are already some inventions done of gear box for motorcycle for transmitting the torque from engine crankshaft to the rear wheel of the motorcycle. The gear box is used to vary the torque as per the different driving conditions. The gearbox increases the required torque for start the ride and put the motorcycle in to motion. After the start or the running of the motorcycle there is no need of high torque, so now gear box will transmit the optimum torque to the rear wheel at high speed. For the operation of gearbox and shifting the gear there is need of some effort of driver of motorcycle. A foot lever is used to shift the gears in a motorcycle. Also, a clutch is placed between the engine and the transmission in order to engage and disengage the flywheel with the transmission. So for smooth driving of motorcycle there is need to time these two operations perfectly. This gear shifting becomes a tiresome process for most new drivers. This can also help in reducing accidents.

Therefore we propose the development of an automated system which can change the gears automatically with the help of speed. This automated system which we propose will also be beneficial in terms of fuel economy and production costs.

In our developed system , both the gear and the clutch are controlled electro- mechanically by a micro controlled based computer system. This system does not require any modification to the engine. The equipment is mounted externally on the body of the motorcycle. This system shifts the gear up and down electro-mechanically like the human rider by sensing the speed of the vehicle, but the system shifts the gear at exactly the correct speed, which produces the smooth gear changing sequence. The engine runs smoothly without any knocking , which increases the engine life. This proposal is different from the one used in cars as it uses electromechanical actuators.

2. GENERAL TERMINOLOGIES

2.1 Sensors and Actuators
A device which detects or measures a physical property and records, indicates, or otherwise responds to it. An actuator is a component of a machine that is responsible for moving or controlling a mechanism or system.

2.2 Servo Motor and Linear Punching Actuator
A servo motor is a rotary actuator or linear actuator that allows for precise control of angular or linear position, velocity and acceleration. It includes a DC motor with a sensor for position feedback. A linear punching actuator uses it's to and fro motion for precise control of angular or linear position, velocity and acceleration.

2.3 Manual Transmission in Bikes
There are three basic controls to operate when it comes to shifting a motorcycle:

1) The throttle

2) The clutch, and

3) The gear selector.

The throttle controls the engine speed, the function of clutch is to engage and disengage the transmission, and the gear

selector selects the gear. Pull the clutch towards you using your left hand, and revolution of the engine with certain r.p.m will be there without moving the bike forward. Releasing of the clutch while the transmission is "in gear" (ie, not in neutral), and you'll move the bike forward.

2.4 Automatic Transmission of Bikes

An electronic gear-shifting system is a method of changing gears on a bike, which enables riders to shift with electronic switches instead of using conventional control levers and mechanical cables. The switches have been connected by wires or wirelessly to a battery pack and to a small electric motor that drives the derailleur, switching the chain from cog to cog. Use of an electronic system is to change gears faster, and because the system does not use Bowden cables and can calibrate itself, it may require less maintenance.

3. LITERATURE REVIEW

- **Automated Transmission System:** [1] Automated Transmission is a clutch-less (without clutch pedal) manual transmission system which uses electronic sensors, processors and actuators (hydraulic or electro mechanical) to do clutch actuation and gear shifts as per command of the driver. Automated Transmission system uses a conventional manual transmission, actuators and control unit to automate the whole process. The system consists of three sections of sensors, processors and Actuators.
- **Gear Selecting Mechanism:** Conventional way of gear selection was been using a gear speeder to detect nicks on transmission gear teeth. However, measurement over balls, runout and tooth-to-tooth composite error could not be measured by the gear speeder and skilled workers were always needed to operate the gear speeder. Efficiency of these highly mechanized processes appreciably depends on the reliability of work of tooth gearings of machine drives.
- Impulsive responses in geared systems with multiple clearances are studied when the mean torque excitation and system load change abruptly, with application to a vehicle driveline with an automatic transmission.

3.1 Reason for topic selection

- Changing gears manually is a gruesome task which has also been very disturbing for the riders.
- However, switching to automatic transmission can help us overcome all such situations.
- Abrupt stopping of the engine in traffic due to poor handling of clutches can be avoided.

3.2 Aims and Objectives of Research

- To design the system for automatic transmission.
- To calculate the dimensions of the magnet to be used and gear ratios being used
- To code the required adruino program for the servo motor and the linear punching actuator.
- Analysis of designed mechanism.
- Fabrication and testing of designed mechanism.

4. METHODOLOGY

4.1 Literature review

The study of following research papers are done:

I. Modeling of an automated manual transmission system.

II. Development of a New Automatic Gear Selecting Machine for Automobile.

III. Tooth wear modeling and prognostication parameters of engagement of spur gear power transmissions.

IV. Impulsive response of an automatic transmission system with multiple clearances: Formulation, simulation and experiment.

4.2 Calculations

Speed range of gearing and vehicle

Now here we calculate the range of speed of gear box output power and range of all minimum and maximum rpm of the gear box shaft in every gear mashing condition…

If we consider the speed for first gear is 0km /h to 20km/h for second 20km/h to 30km/h for third 30km/h to 45km/h and for greater than 45km/h take for the gear mashing.

Here, we have the range in term of speed in km/h now converting the vehicle speed in rpm for that use the equation , as given below.

N=V*60/3.14 D; Where , N=speed in rpm

V=speed in m/s

D=tire diameter in m

Take, D=0.80 meter tire diameter.

Thus by using this equation we can find the our speedometer speed km/h can convert in revolution per minute(rpm).

We have output gear reduction as 9.889 (calculated by using the output shaft dia. And the teeth on rear to front sprockets)

The gear torque is shown as below.

Gear arrangement	**Speed of vehicle in km/hr.**		**Speed of vehicle in rpm.**		**Speed on output shaft of gear box in rpm.**	
	Lower	**Higher**	**Lower**	**Higher**	**Lower**	**Higher**
1st	0	12	0	117.95	0	1166.41
2nd	12	24	117.95	235.90	1166.41	2332.82
3rd	24	36	235.90	353.86	2332.82	3499.32
4th	36	50	353.86	491.47	3499.32	4860.13

We have gathered data from 2 different drivers. 5 different patterns were recorded from each driver and the average of these speeds was taken. This data was also cross checked from various researches online.

DRIVER 1

Gear No.	1st	2nd	3rd	4th	5th
First Iteration	-	8	18	35	44
Second Iteration	-	11	24	36	46
ThirdIteration	-	10	23	36	48
Fourth Iteration	-	13	24	34	51
Fifth Iteration	-	13	24	38	52

DRIVER 2

Gear No.	1st	2nd	3rd	4th	5th
First Iteration	-	11	25	34	51
SecondIteration	-	13	24	38	48
Third Iteration	-	12	26	35	49
Fourth Iteration	-	9	23	36	53
Fifth Iteration	-	10	22	36	53

Gear	Final Decided Speed	RPM	No of rotations
First Gear	-		
Second Gear	12	208.5	3.475
Third Gear	24	418	6.96
Fourth Gear	36	633	10.55
Fifth Gear	50	870	14.5

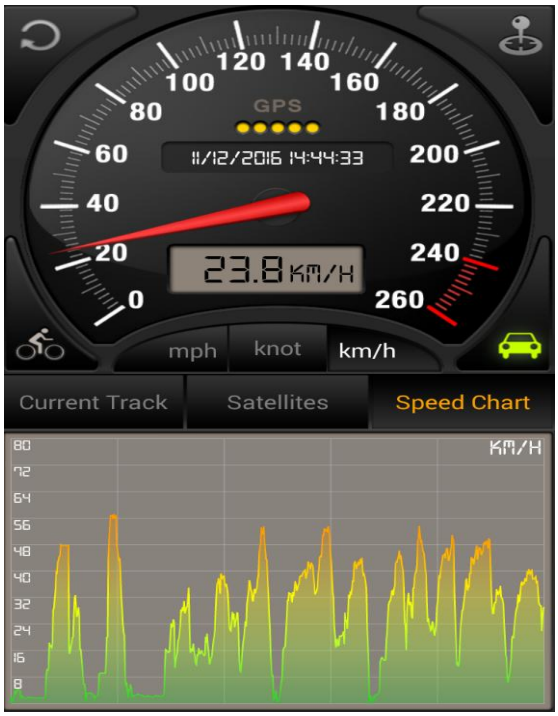

4.3 Selection of actuator:

CALCULATION OF THE SHIFT FORCE :

(Force required for downward shift= 4.8 kg i.e. approx 45N)

(Force required for upward shift= 4.2 kg i.e. approx 41 N)

Therefore we have decided to use an actuator of 50N force for both the upward and downward shifting. This will be enough to push the lever and also not deform/ distort the lever. This is almost equivalent to the force applied by the human foot.

Specifications

- **Hall effect sensor**

low current consumption

Dimensions: 62.5mm x 25.4mm x 3mm

- **Spokes Magnet**
- **Arduino Project Enclosure**

- **Servo Motor**

Key specs at 6 V: 0.14 sec/60°, 240 oz-in (17 kg-cm), 60 g

- **Linear actuator**

Dimension: diameter: 5.4 cm. Length 110mm.

5. CODING

The coding for the servo motor using the adruino software was completed. This program allows theadruino to control the servo motor functioning according to the situation of the drive.

The code that is written works on the Boolean principles. It gives a positive signal (1) whenever the gear has to be shifted. In any other case, it is (0).

If, else statements are used for shifting the gears whereas time delay is used to manage the operation of clutch.

The code to display in the current gear is also written.

5.1 Design

In this project working and model some extra devices are used which are not generally used in the motorcycle and for gear shifting.

1. Magnetic clutch:

2. Relays

3. High torque motor(wiper motor)

6. MANUFACTURING

The prototype is manufactured on the Honda CBZ bike.

6.1 Construction

Flow chart:

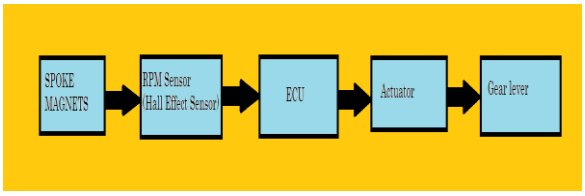

Fist of all,magnets will be placed on a rear wheel and and r.p.m sensor will be placed. As the wheel rotates magnets attatch to the wheel also rotates. The hall effect sensor which works on the principle of hall effect will generate the voltage. When magnetic field will pass pependicular to the field, this voltage will be sent to the ECU and according to situation ECU will give commands to actuator; thus changing gear back and forth.

6.2 CAD Model

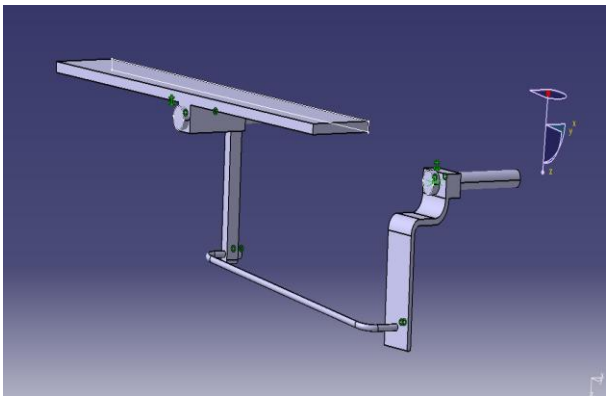

6.3 Circuit Diagram

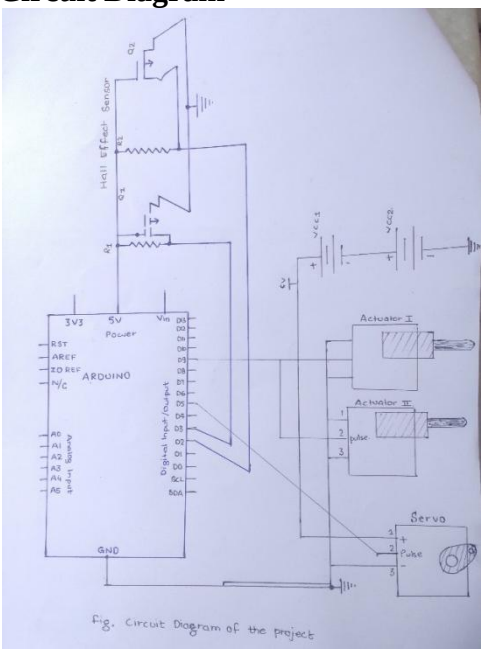

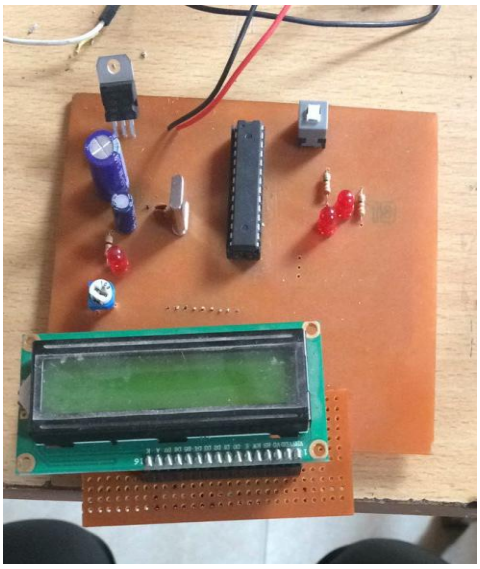

(Location of various parts)

7. CONCLUSION

This system is flexible and can be implemented on a motorcycle available in the Indian market without any modification. The motorcycle manufacturing can also use the system in their vehicles because it can be easily fitted to the motorcycle and there is no need of internal modification of the gear system. By installing this low cost system in their motorcycle. Companies may also be able to increase their sale due to availability of these new features. This will also help in improving fuel economy in addition to improving the parts lifetime.

8. REFERENCES

[1] Gianluca Lucente, Marcello Montanari, Carlo Rossi (2006) 'Modelling of an automated manual transmission system' University of Bologna, Viale Pepoli 3/2, 40123 Bologna, Italy.

[2] Y. Kawasaki, M. Shinoda, S. Nojiri (2005) 'Development of a New Automatic Gear Selecting Machine for Automobile Transaxle Manufacturing' lsuzu Motors Ltd./Japan.

[3] Valentin Onishchenko (2008) 'Tooth wear modeling and prognostication parameters of engagement of spur gear power transmissions'Donetsk National Technical University, 58 Artjom Street, 83000 Donetsk, Ukraine.

[4] Ashley R. Crowthera, Rajendra Singha, Nong Zhangb, Chris Chapman (2007) 'Impulsive response of an automatic transmission system with multiple clearances: Formulation, simulation and experiment' Mechanical Engineering Department, The Ohio State University, 201 West 19th Ave, Columbus, OH 43210, USA.