ISSN (O): 2393-8609

International Journal of Aerospace and Mechanical Engineering

Volume 4 – No.2, April 2017

DESIGN OF STEERING SYSTEM OF FORMULA STUDENT RACE CAR

Amberpreet Singh
Student (B.E. mechanical)
Chandigarh University
amberbhangu@yahoo.com

Vaibhav Trehan
Student (B.E. mechanical)
Chandigarh University
vaibhavtrehan21@gmail.com

Inderjeet Singh Saini
Student (B.E. mechanical)
Chandigarh University
inderjeetsinghsaini@outlook.com

ABSTRACT

The 2016 ishell SAE INDIA team planned to design and fabricate a custom steering design that not only provided high accuracy and precision, but also met our budget norms. The initial design consisted of a near conventional rack and pinion design that included a large diameter pinion gear. However, that design implemented an unappreciable accuracy and cornering abilities. Moreover, that design required large steering force inputs from the driver.

A secondary design was made, that consisted of an extra idler gear between the pinion and the rack. Relatively small pinion gears were used in this new design as compared to the previous design, but still larger than the conventional systems. For this, many dual pinion steering mechanisms (including the ones of Alfa Romeo and Volkswagen) were studied. Most of them used either a hydraulic or an electrically actuated system. The advantage of our design over other dual pinion steering systems is that our design is a purely mechanical system.

On doing some further research and calculations, we determined the size and specifications of rack and pinion gears and a 3:1~4:1 steering system was ready at our disposal.

Keywords

Rack and pinion, steering ratio, dual pinion mechanism, steering mechanism, steering system, SAE SUPRA steering mechanism, steering, working of steering system.

1. INTRODUCTION

As we are working on a national level project named SAE SUPRA in which the design and fabrication of a Formula student race car was to be done and for that we had the task to design a steering system that facilitated the driver to take sharp turns with less efforts or with less revolutions of steering wheel. To achieve this we decided to modify the conventional steering mechanism that is used in the normal road cars i.e we planned to reduce the steering ratio from 18:1(Conventional system) to 3:1 or 4:1.

The design consists of a conventional rack and pinion steering with an extra idler gear between them. The diameter of both the gears has been increased from the conventional size due to which, improved sensitivity has been achieved. However, the extra idler gear caused steering reversal, which was avoided by mounting the tie rods on the front part of upright rather than mounting it at the rear end which is usually done in cars now a days.

2. AIM AND OBJECTIVE

The aim was to design and fabricate a steering system for a race car that required less effort from driver for its working and took less revolutions from lock to lock. Accuracy, precision and cornering ability were also the major concerns.

The conventional rack and pinion system could not be used as its steering ration is b/w 15:1-20:1, that means it takes 3 revolutions from lock to lock at an average. And its very difficult for the driver of race car to give more revolutions to steering wheel to achieve full steering, so we decided to reduce the steering ratio to 3:1~4:1.

3. DESIGN METHODOLOGY

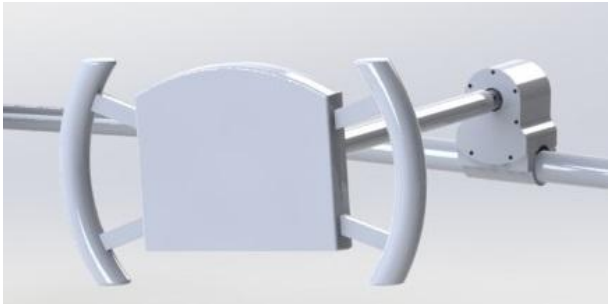

4. CALCULATIONS

P - Power

N - no. of revolutions

T - Torque

D - Diameter

Fzl - Vertical Load, Left Wheel

Fzr - Vertical Load, Right wheel

d - Lateral Offset at the ground

λ - Lateral Inclination Angle

δ - Steer Angle

v - Caster Angle

Cf - Cornering Force

Fyl - Lateral Force, Left Wheel

Fyr - Lateral Force, Right Wheel

ISSN (O): 2393-8609
International Journal of Aerospace and Mechanical Engineering
Volume 4 – No.2, April 2017

r - Tire Radius

Fxl - Tractive Force, Left Wheel

Fxr - Tractive Force, Right Wheel

d - Lateral Offset at the Ground

4.1 Power on steering column

P= (2πNT) / 60

T= Force * Radius

T= 250*0.018= 4.5

P=(2*3.14*18*(250*0.018)) / 60

P= 8.478 watts

4.2 Moment due to tractive force

Et - Engine Torque

η - Efficiency of Power train

Ng - Transmission Ratio

Na - Driving Axle Ratio / Sprocket Ratio

R - Tire Rolling Radius

Φ - Adhesion coefficient b/w tyre and road surface

Wr-Vehicle weight component on the driving wheels

TE - Applied tractive force based on engine torque

TE max - Max. permissible limit of tractive force

Fxl -Tractive Force, Left Wheel

Fxr -Tractive Force, Right Wheel

d - Lateral Offset at the Ground

Depth of tire = (Aspect ratio/100)*width of tire =(50/100)*175

Outer radius of wheel = Depth of tire + Rim Radius = 87.5+165= 252.5

R = Outer Radius of wheel / 1000 =0.2525

TE = (Et*η*Ng*Na) / R

TE= 2015 N

TE max= (ϕ * Wr)

= 0.7*7

= 4.9 N

Moment due to tractive force = (Fxl - Fxr)*d

= (2015.1445 - 2015.1445)*25.4

= 0 Nm

4.3 Moment due to lateral force

Cf = Cornering force

W = Weight of vehicle

ML= Moment due to lateral force

L = Lateral Force

m = Mass of vehicle

W = m*9.8 = 300*9.8=2943

Cf = TE / W

=2015.1445 / 2943

=0.6847 N

L = (Cf*m) / 4

= (0.6847*300) / 4

= 51.3543 N

ML = -(Fyl + Fyr) r tan(v)

= -(513.543+513.543)*0.2525*tan(5.7)

= -25.88 Nm

4.4 Moment due to vertical load

Fzl - Vertical Load, Left Wheel

Fzr - Vertical Load, Right wheel

D - Lateral Offset at the ground

λ - Lateral Inclination Angle

δ - Steer Angle

MV - Moment due to vertical load

MV= -(FZL + FZR)*d*sin(λ)*sin(δ) + (FZL – FZR)*d*sin(v)*cos(δ)

MV= -(105+105)*25.4*sin(15)*sin(30) + 0

= -690.20 Nm

These three factors(tractive force, lateral force, vertical force) affect the steering system. All these conditions produce a moment acting about the steer axis, and the moment is balanced through the steering rack. The total moment about the steer axis is a summation of the individual moments.

Hence, total moment about steer axis (M) :

Moment due to tractive force + moment due to lateral force

+ moment due to vertical force

M = 0 + 17.1094 + (-788.82)

= -771.710 Nm

5. MAIN PARTS & ANALYSIS

Parts	Material
Main Support Tube	Al-6061
Pinion Housing	Al-6061
Pinion Housing Cap	Al-6061
Rack Housing	Al-6061
Tie Rod End Bungs	Al-6061
Rack	Steel 8620
Gears	Steel 8620
Bronze Bushings	Bronze

6. DESIGN

Wheelbase(b)=1650mm

Rear Track Width(a)=1250mm

Front Track Width(c)=1200mm

Turning radius(R)=4000mm

ISSN (O): 2393-8609

International Journal of Aerospace and Mechanical Engineering

Volume 4 – No.2, April 2017

Inner Front Wheel

Inner Real Wheel

R=b/sinθ – [a-c/2]

R=b/tanθ – [a-c/2]

4000=1650/sinθ - [1250-1200/2]

4000=1650/tanθ – [1250-1200/2]

θ=24.2Degree

θ=22.28Degree

Outer Front Wheel

Outer Inner Wheel

R=b/sinϕ + [a-c/2

R=b/tanϕ + [a-c/2]

4000=1650/sinϕ + [1250-1200/2]

4000=1650/tanϕ + [1250-1200/2]

ϕ=24.57Degree

ϕ=22.53Degree

6.1 Steer Angle

θ=R/L=Wheelbase/Radius of turn

=1645/4000

=23.57 degree

6.2 Steering Ratio

The steering ratio is the ratio of how much the steering wheel turns in degrees to how much the wheel turns in degrees. Approximating maximum turn to be of 30 degrees and steering wheel movement to be 180 degrees the steering ratio can be calculated as

S.R =180/30

=6

6.3 Rack Travel

Once the steering ratio has been calculated the rack travel needs to be decided.

The steering wheel travel for one complete rotation

=2π x r (r = radius of wheel)

=0.816m

Considering maximum steer angle and max rack travel is reached at complete rotation of the steering wheel.

The Steering ratio can be equated to Steering wheel travel to the Rack Travel

Steering Ratio=Steering Wheel Travel/ Rack Travel

6=.816/Rack Travel

Rack Travel=0.136m or 5.35inch

G* = Gear ratio = *T* / *t= Number of teeth on the pinion, T = Number of teeth on the wheel

Gear Ratio=1:3

No of teeth on Pinion(T_1) can be calculated

$$t = \frac{2A_W}{G\left[\sqrt{1+\frac{1}{G}\left(\frac{1}{G}+2\right)\sin^2\phi}-1\right]}$$

No of teeth on wheel or Rack(T_2) can be calculated

$$t = \frac{2 \times A_W}{\sqrt{1+3\sin^2\phi}-1}$$

$P_c = \pi D/T$

m(module)= D/T

The Values of module(m) generally considered as 1,1.25,1.5,2,2.5,3,4,5,6,8,10,12,16 and 20 in Indian Standards.

We decided G=1:3, so the value of Adendum(A_w), Dedendum(D_w) and Pressure Angle(ϕ) Consider According to Indian Standards

A_w = 1 module

D_w = 1.25 module

ϕ=20 Degree

Sometimes, the spur gears (*i.e.* driver and driven) are to be designed for the given velocity

ratio and distance between the centres of their shafts.

Let *x* = Distance between the centres of two shafts,

*N*1 = Speed of the driver,

*T*1 = Number of teeth on the driver,

*d*1 = Pitch circle diameter of the driver,

*N*2, *T*2 and *d*2 = Corresponding values for the driven or follower, and

*p*c = Circular pitch.

We know that the distance between the centres of two shafts

$x = d_1 + d_2 /2$

Speed ratio or velocity ratio can be calculated as

$N_1/N_2 = T_2/T_1 = d_2/d_1$

T_1=12teeths

T_2=36teeths

$T_2/T_1=d_2/d_1$=36/12

=3/1

$d_2 = 3d_1$

$x=d_1 + d_2/2$ (x=.86inch or 21.77mm)

By Solving we get,

d_1=10.92mm

d_2=31.76mm

Now we calculate Circular pitch(P_c)

$P_c = \pi d_2/T_2$

= 3.14*31.76/36

= 2.77mm

ISSN (O): 2393-8609

International Journal of Aerospace and Mechanical Engineering

Volume 4 – No.2, April 2017

Diameteral Pitch(P_d) = π/P_c

= 3.14/2.77

= 1.13mm

m(module)=D/T

=.90 ~ 1

7. ASSEMBLY OF STEERING ASSEMBLY

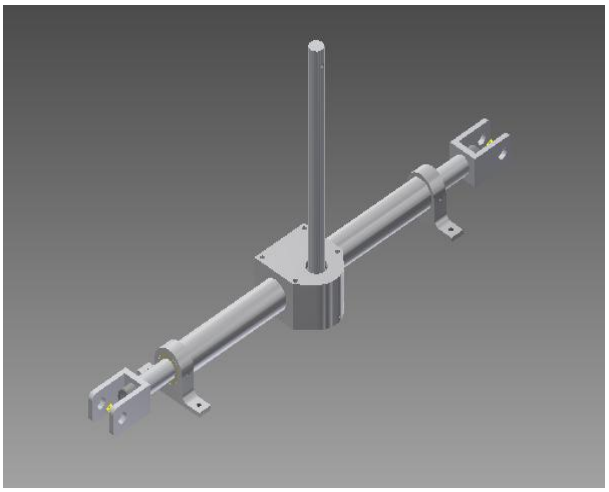

7.1 Rack and Pinion

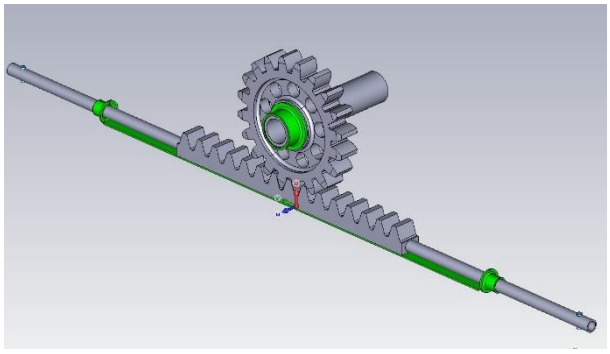

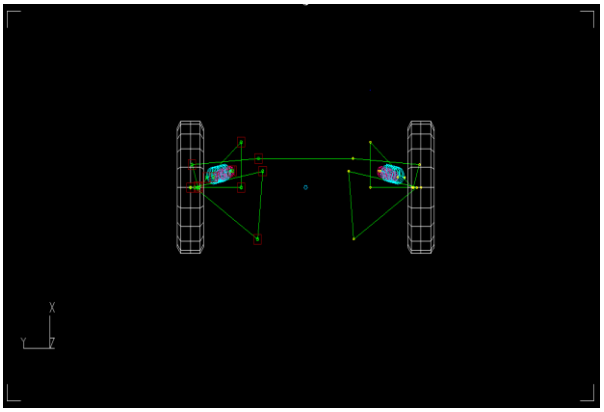

Top view of assembly

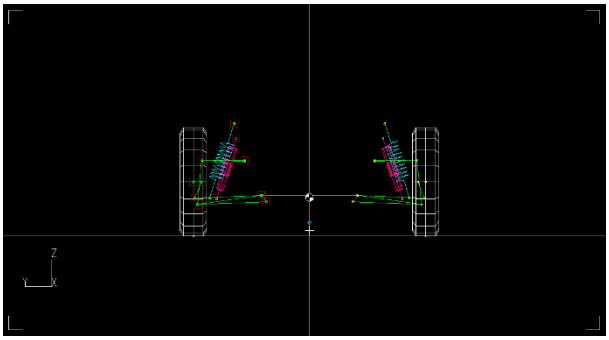

Side view of assembly

7.2 Akerman%

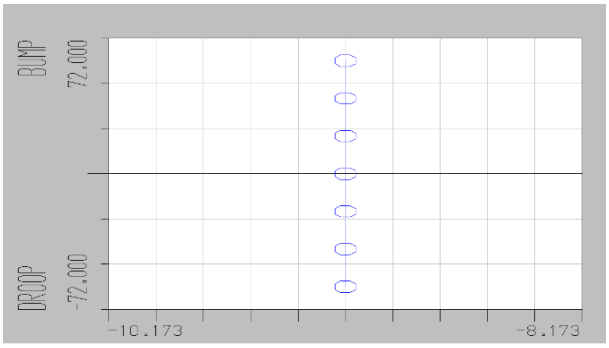

8. CONCLUSION

After all the calculations were completed and analysis in LOTUS Shark suspension analyzer was conducted the final steering assembly was designed in Solidworks. The above picture shows the final design incorporated into the chassis of the SAE car. This steering system designed for the turns generally encountered in the SAE events was optimal to counter negative impacts of bump and roll steer and also possessed self-returning capability. Universal joints have been added in the steering column to line it up nicely with the pinion shaft. It also provides for the columns to fold up in the event of a hard frontal collision preventing it from being forced into the cockpit and injuring the driver.

9. ACKNOWLEDGMENTS

Our thanks to Prof Dr..Amit Singla the experts who have contributed towards design and development of steering system and help us to written this paper

10. REFERENCES

[1] William F. Milliken and Douglas L. Milliken, 1995, “Race Car Vehicle Dynamics”, Society of Automotive Engineers, Inc. .

[2] Gaffney, Edmund F., and Anthony R. Salinas. Introduction to Formula SAE® Suspension and Frame Design. No. 971584. SAE Technical Paper, 1997

[3] Gillespie, Thomas D., Fundamentals of Vehicle Dynamics. Society of Automotive Engineers, Inc., Pennsylvania, 1992

[4] https://www.youtube.com/watch?v=vzRNlg9ttz0

[5] SAE supra rulebook 2017.

[6] Theory of Machine (Third Edition)Publisher:

PearsonmEducation Publication Date: 2009; Edition: 3rd edition.