ISSN (O): 2393-8609

International Journal of Aerospace and Mechanical Engineering

Volume 4 – No.3, July 2017

Hybridisation in two wheelers using open differential gear train

Sanyam Goel
B.Tech Automotive Design
61/4 GovindGarh
Dehradun-248001
sanyamgoel15@gmail.com

Muditam Nigam
B.Tech Automotive Design
104/115 P Road, Sisamau
Kanpur-208012
muditamnigam7@gmail.com

Himanshu Bindal
B.Tech Automotive Design
892 sector 9
panchkula-134109
himanshubindal01@gmail.com

ABSTRACT

In today's world the demand of hybrid vehicles have increased considerably but its application is limited to four wheelers and the designs of their transmission system are complicated. Due to its complexity, the hybrid technologies are not introduced in two wheelers. In this research paper a simple transmission system is employed to achieve hybridization in two wheelers. This design is capable of utilizing the power from both motor and engine simultaneously and individually based on the concept of an open differential. The two prime movers are connected to the two shafts of the differential and the combined power is supplied to the wheels by the third shaft. The main objective of this project is to reduce pollution and fuel consumption by means of hybridization, as it is very much known that pollution is one of the major concerns in any automobile industry. The amount of emission from a conventional IC engine propelled two wheeler is much more than the system proposed in this research as the initial power is given by energy efficient motors and after starting the engine, both the movers are propelling the vehicle.

KEYWORDS

Differential, hybrid gear train, transmission, two wheeler vehicle, valves.

1. INTRODUCTION

Most of the automobile industries are focusing on developing and innovating hybrid technology. The limitations in the availability of fossil fuels and increasing pollution rate have compelled the industries to focus on hybrid technology. Hybrid technology has grown from late nineties and varies methods are employed to achieve hybridization. The main concern while developing hybrid technology was that the power output from the system must not be less than that of a conventional system of an IC engine propelled vehicle. The hybrid systems are employed in four wheelers mostly. Hybridization in two wheelers is not common and therefore no hybrid two wheelers are moving on road.

1.1. Hybrid Vehicle Drive train

Hybridization of two power sources can be achieved in various combinations of series connection, parallel connection and series-parallel connection are used to achieve efficient system and are described below.[1]

1.1.1.Series Hybrid

In series hybrid vehicle the ICE, motor-generator rearranged in series for transmitting the power to wheels. The engine acquires maximum power and efficiency at only a small speed band of its power curve. The engine is allowed to provide power to generator in this region thus optimizing power conversion. During driving, power is transmitted by electric motor which extracts energy from the battery .[2]

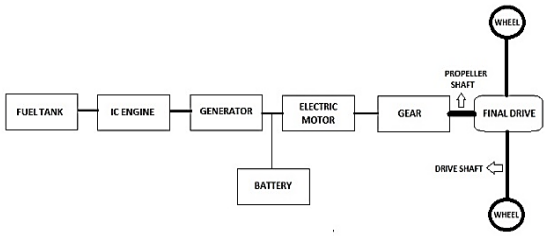

Figure 1. SERIES CONNECTION

1.1.2.Parallel Hybrid

In parallel hybrid IC engine and electric motor both are connected to the wheels through suitable transmission arrangement. Parallel hybrid vehicle needs only these two devices for propulsion. In this combination electric motor and IC engine deliver power both simultaneously or individually for transmitting required amount of torque.[3]

Parallel hybrids work individually in case of either emergency or when low speed, energy efficient drive is required (motor drive).However hybrid mode is employed in high power operation.

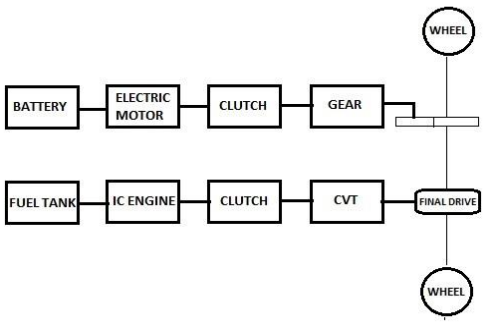

Figure 2. Parallel Connection

1.1.3.Series-Parallel Hybrid

It is a combination of both series as well as parallel mechanism. When compared to series hybrid it has an additional mechanical link between generator and an electric motor and an additional generator when compared to parallel hybrid. Through the series-parallel hybrid it is

ISSN (O): 2393-8609

International Journal of Aerospace and Mechanical Engineering

Volume 4 – No.3, July 2017

possible to use take advantage of both series as well as parallel hybrid as shown in Figure 3.

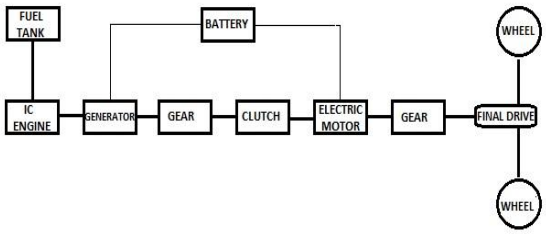

Figure 3. SERIES-PARALLEL CONNECTION

There are many possible combinations in this category. Two of the major connections include, when the driveline is in electric motor heavy case which tells the electric motor is more active than the IC engine, the other connection is when the driveline is in engine heavy case which tells the IC engine is more active than the electric motor. The common thing in both the mechanism is that the vehicle is started by electric motor and the engine is turned off. When the power requirement is more the IC engine and motor are used in combination which results in better acceleration.

1.2. Open Differential

When a car is taking a turn, the outer wheels will have to travel greater distance as compared to the inner wheels in same time. The device that adjust the speed of respective wheel during turning and keeping the speed of wheels same when going straight ahead is known as differential. It consists of a crown wheel to which a cage is attached. The cage carries two planet and two sun gears that are always in mesh with each other.[4]

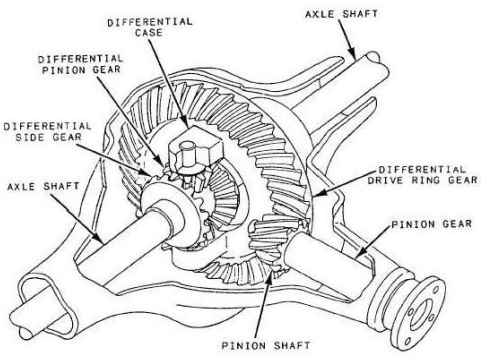

Figure 4. Open differential

2. CONCEPT OF HYBRID DIFFERENTIAL GEARTRAIN

Most of the hybrid transmission systems in the market are either series or parallel hybrid system. This type of transmission system consists of parallel system in which power is supplied by motor and engine alternatively as well as simultaneously. The arrangement is constructed in order to run in four different modes based on application of brakes (B1 and B2). Since the differential is a gear train which has the property that the angular velocity of one shaft is the average of angular velocities of other. Two shafts of differential are directly or indirectly connected to respective motor-generator and engine, thus giving their individual power to final shaft at wheels at appropriate speeds. The power of either prime mover can also be delivered to other mover thus eliminating the need of starter motor and alternator/generators separately. Moreover since power of two systems is being algebraically added it reduces the need for large inefficient engines for high power applications.

2.1. Design of the transmission

The system is designed to eliminate the need for complex and bulky gearboxes required for shifting of power supply from engine to motor. The conventionally available systems incorporate heavy electronics and machinery which increases cost of system. Because of these drawbacks no pioneering hybrid two wheelers are available in market.

The differential power supply system consists of an open differential whose two shafts are connected to IC engine (E) and motor-generator (M) respectively, while the other shaft is coupled to wheel (W). The power flows in order of the mode in which vehicle is being employed. A suitable transmission (T1) is required to manipulate the speed torque curve of IC engine. The transmission can either be automatic or manual based on application. Moreover a fixed gear reduction in provided to motor (T2) and wheels (T3) for meeting the road load condition.

A set of multiple brakes are used in order to obtain different modes of operations of hybrid gear train. One brake (B3) is provided to wheel to reduce the speed of vehicle. This brake is usually provided in all automobiles as a safety feature. The brakes could be disk or drum type.[6] Two additional brakes (B1and B2) are also incorporated in drive in order to generate a pure engine or motor drive. These brakes are fixed to respective engine and motor shafts or can be placed after their transmission as per packaging of vehicle. The actuation of brake B2 and B3 is achieved by a separate lever (A1) which provides pressurized fluid to brake calipers via a 4-way 3-position valve. The 4-way 3-position valve is a directional valve employed to ensure that either the vehicle remains in hybrid mode or in state of individual drive.[5] The selection of type of drive is determined by a switch (A2) that is manually operated. The main wheel brake (B3) is actuated by a hand lever provided on scooter's dash panel. The brake can be actuated by any economical brake type.

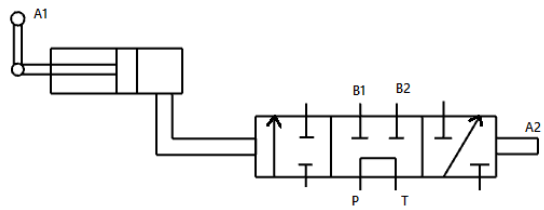

Figure 5. Actuating mechanism of brake B1 & B2

3. WORKING OF HYBRID DIFFERENTIAL GEARTRAIN

This system works on the principle of open differential. Based on power flow the system can be used in four different modes to obtain necessary drive.

In idling condition the power flow occurs from engine to motor-generator which converts power from engine to run motor thus generating electricity to charge batteries. This is achieved by actuating the brake (B3)on the output shaft

ISSN (O): 2393-8609

International Journal of Aerospace and Mechanical Engineering

Volume 4 – No.3, July 2017

of differential thus transmitting whole engine power in one direction only. This arrangement eliminates need of alternators.

For starting of engine, motor power is used to initially crank the engine from state of rest. In this condition the motor rotation is transferred to ring gear which in turn revolves the pinion bevel gear. This is achieved by stopping the output shaft of differential by actuating brake (B3). The arrangement tends to eliminate the need of a separate starter motor.

During cruising and high speed of vehicle both engine and motor are used to supply power to the wheels. After cranking of engine by motor, the engine tends to rotate its side differential gear itself thus supplying power in form of rotation of meshing differential pinion gear, while motor provides rotation to wheels in form of revolution of differential case/cage. This arrangement leads to algebraic addition of power of engine and motor.

In some case of emergencies or malfunctioning in prime movers, power can be derived individually from motor or engine. This system is achieved by addition of one brake to motor-generator output shaft (B1) and other to engine shaft (B2). By applying either brake, a drive from other prime mover can be derived. The power is transferred from mover to wheel without affecting other. The actuation of brake B1 and B2 is achieved by using an assembly of hand lever, single cylinder hydraulic piston and four ways 3 position valve. The output of valve is connected to brakes and transfer port is connected to reservoir. Hence, complete parallel hybrid two wheeler can be constructed.

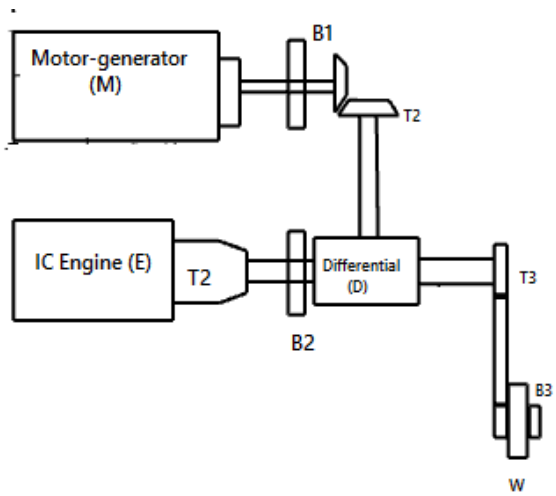

Figure 6. Layout of Differential power Supply

4. DESIGN AND ANALYSIS

The designing of the system is based on principle of gear trains and differential. The differential is a gear train which has the property that "*the angular velocity of one shaft is the average of angular velocities of other*."

Assuming that in normal automobile application a power source provides Pi to differential in shaft 1.The shaft 1 rotates at with N1 rpm. Let the speed of rotation of other two shafts be (N2& N3).

Therefore,

$$N_1 = \frac{N_2 + N_3}{2} \qquad (1)$$

Let the torque supplied by shaft 1 is τ Nm

Multiplying equation (1) with τ

$$\tau N_1 = \tau \times \frac{N_2 + N_3}{2} \qquad (2)$$

Multiplying equation (2) with constant 2π

$$2\pi\tau N_1 = 2\pi\tau \times \frac{N_2 + N_3}{2}$$

$$2\pi\tau N_1 = \frac{2\pi\tau N_2}{2} + \frac{2\pi\tau N_3}{2}$$

Using,

$$P = 2\pi N\tau$$

$$P_i = P_2 + P_3$$

$$P_{input} = P_{output}$$

The above equation represents that power/ energy is conserved in a differential.

Using the above principle of power conservation, the four modes of differential drive can be represented as:

4.1 Idling Mode

Brake B3 are applied. Thus the power transmitted to shaft 3 is zero. This case is analogous to actual slipping of tire of a car whose one wheel is on slippery surface and other on a tractive surface.

$$P_{input} = P_{output}$$

$$P_{engine} = P_{motor} + P_{wheel}$$

But $P_{wheel} = 0$

$$P_{engine} = P_{motor}$$

4.2 Starting Mode

ISSN (O): 2393-8609

International Journal of Aerospace and Mechanical Engineering

Volume 4 – No.3, July 2017

Brake B3 are applied. Thus the power transmitted to shaft 3 is zero.

$$P_{input} = P_{output}$$

$$P_{motor} = P_{engine} + P_{wheel}$$

But $P_{wheel} = 0$

$$P_{motor} = P_{engine}$$

4.3 Hybrid mode

For achieving hybridization in drive B3 brake is removed and power flow occurs as:

$$P_{input} = P_{output}$$

$$P_{motor} + P_{engine} = P_{wheel} \qquad (2)$$

Rotation on output shaft 3 =

$$\frac{N_m}{T_m} + \frac{N_E}{T_E}$$

Rotation at wheels N_w =

$$\frac{1}{T_w} \times \left[\frac{N_m}{T_m} + \frac{N_E}{T_E}\right]$$

Using equation

$$2\pi\tau N_w = P_{motor} + P_{engine}$$

Torque obtained on wheels τ=

$$\frac{P_{motor} + P_{engine}}{\frac{2\pi}{T_w}\left[\frac{N_m}{T_m} + \frac{N_E}{T_E}\right]}$$

4.4 Individual drive mode

To obtain individual drive in two-wheeler, a specific combination of 4-way 3-position valve and lever A1 is required to obtain either a pure motor or engine drive.

When brake B1 is pressed a pure engine drive is obtain.

$$P_{engine} = P_{wheel}$$

When brake B2 is pressed a pure motor drive is obtain.

$$P_{motor} = P_{wheel}$$

5. CONCLUSION AND SCOPE FOR FUTURE WORK

The above demonstrated arrangement fulfils the desired requirements of a full and plug-in hybrid. The system arrangement is designed to run on all hybrid modes without considerable loss in power of two-wheeler. Moreover elimination of alternator, starter motor and use of smaller engine tends to compensate the cost of additional equipment required for fabrication of drive. A fuel efficient and continuous power supply to wheel ensure economic and eco-friendly mode of private transportation.

The technology of differential drive though precise and well-defined, lacks the convenient and automatic shifting of drive from hybrid mode to individual drive mode. The use of electronics can be employed to cope with this situation. However it leads to increase in cost.

Beside the inherent demerit the system can be a ground-breaking technology in two wheeler transmission technologies.

6. REFERENCE

[1] Schmidt, Michael R., and Donald Klemen. "One-mode, input-split, parallel, hybrid transmission." U.S. Patent No. 5,558,595. 24 Sep. 1996.

[2] Larminie, J. and J. Lowry. 2003. Electric Vehicle Technology Explained. United Kingdom: John Wiley & Sons, Ltd.

[3] Schmidt, Michael R. "Two-mode, input-split, parallel, hybrid transmission." U.S. Patent No. 5,558,588. 24 Sep. 1996.

[4] Gleasman, Vernon E. "Differential gear mechanism." U.S. Patent No. 2,859,641. 11 Nov. 1958.

[5] Bardoll, Meinrad. "4/3-directional control valve." U.S. Patent No. 4,616,674. 14 Oct. 1986..

[6] Hofstetter, Robert. "Hydraulic brake system." U.S. Patent No. 2,130,799. 20 Sep. 1938.