ISSN (O): 2393-8609

International Journal of Aerospace and Mechanical Engineering

Volume 3 – No.2, April 2016

VARIOUS DESIGNS OF CRASH BOX

Devanshu Mudgal
Student (BTech,Mechanical)
Graphic Era Hill University
Clement Town, Dehradun, India
dev.vats3@gmail.com

ABSTRACT

The objective of this project was to design various designs of crash box sections in Catia V5.The crash boxes were designed in catia using various methods, techniques and module. Crash Boxes are generally made up of thin sheet of light weight Aluminum alloys with different type of crash beads as well. These designs may also help in providing better safety by providing deformation.

Keywords

Crash Box,3D modeling in Catia V5,crash beads.

1. INTRODUCTION

Crash box, with which a car is equipped at the front end of its front side frame, is one of the most important automotive parts for crash energy absorption. In case of frontal crash accident, for example, crash box is expected to be collapsed with absorbing crash energy prior to the other body parts so that the damage of the main cabin frame is minimized and passengers are saved their lives. Conventionally, a crash box is equipped with several itches as shown in figure 1, called "crash beads", so that those crash beads may initiate buckling deformation and make the crash box easily collapse. Recently, it has been strictly required to satisfy both reduction of body weight and improvement of crash worthiness and thus, regarding crash box, it is required to ensure high energy absorption using sheet as thin as possible. However, there is often the case that the crash beads do not work as designed when a thin sheet is applied as the material for a crash box and thus, it has become difficult to acquire sufficient energy absorption only by the crash beads.

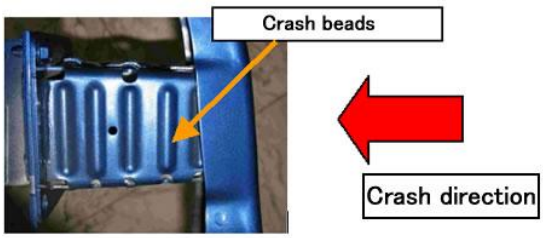

Figure 1:showing Crash beads

In this report attention is focused on optimum cross sectional shape of crash bead and various shapes that can be taken into consideration.

General construction:-

The main points to improve the impact energy absorption can be concluded in three points-

- ensuring high buckling load at the ridge lines,
- minimization of buckling cycle time,
- Minimization of load fluctuation.

The general formula for buckling in beams is given by:-

$$F = \frac{\pi^2 EI}{(KL)^2}$$

Where,

F = vertical load on column,

E = Modulus of elasticity,

I = Moment of inertia of cross section,

L= length of column,

K= column effective length factor.

2. MATERIAL OF CONSTRUCTION AND ITS PROPERTIES

Crash boxes should be light weighted so that they does not increases weight of the vehicle and it also should be able to absorb maximum energy. So, they are made up of light weight Aluminum alloy. All the figures (figure 3,4,5,6,7,8) have length 116mm,height 270 mm ,width 96mm.

Properties of aluminum Alloy 2014-T6:-

Yield Strength- 400 MPa.

Young's modulus - 455 MPa

Yield Stress – 455 MPa

Ultimate Strength -40 -50 MPa

Density – 2.7 g/ cm^3

3. MANUFACTURING METHODS

Crash boxes can be manufactured at large scale by using 3 methods:-

3.1 Part Molding

Since it is a sheet metal part it can be molded and then welded easily for mass productions. This method can also produce complex shapes many at a time depending upon machine capacity you may see it in figure 2.

3.2 Over Braiding

This method can be used for mass production of composite crash boxes and it is effective only in simple cases.

3.3 Epoxy method

A robotic can be used to apply epoxy parts without any error and join the sheet metal after giving it shape.

ISSN (O): 2393-8609
International Journal of Aerospace and Mechanical Engineering
Volume 3 – No.2, April 2016

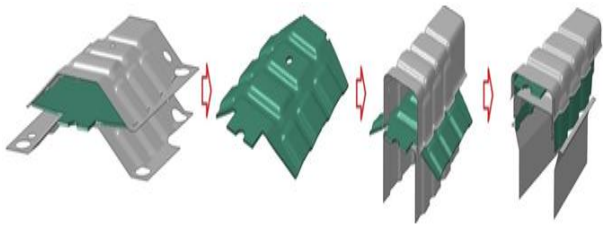

Figure 2: Above image shows method of manufacturing using mould

4. TYPES OF SHAPES

4.1 Rectangular with circular grooves

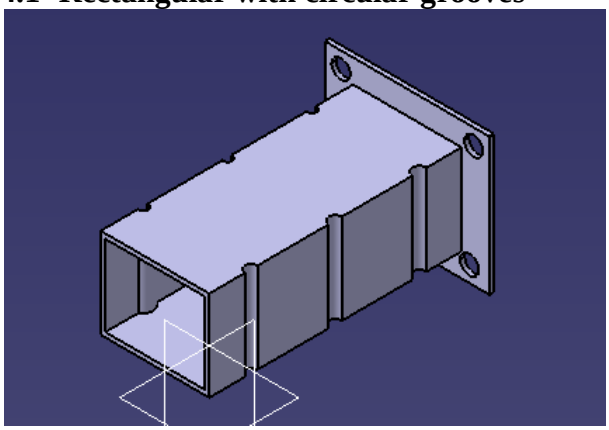

Figure 3: Rectangular crash box with circular grooves

4.2 Rectangular with four sided grooves

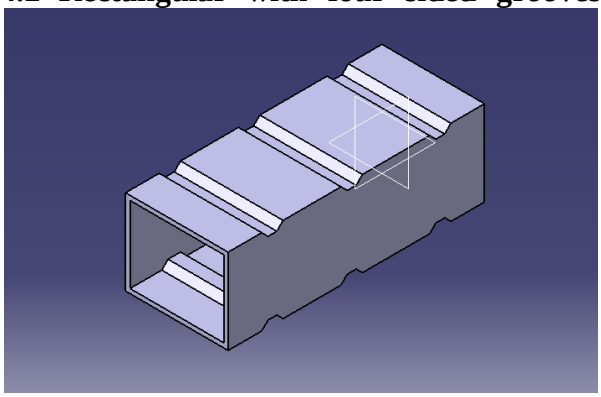

Figure 4:Rectangular crash box with four sided grooves

4.3 Circular with circular grooves

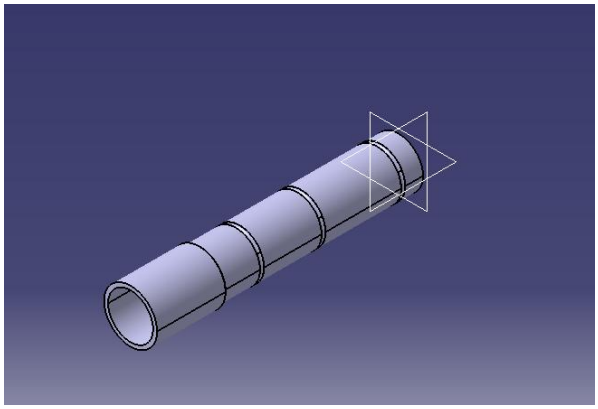

Figure 5: Circular crash Box with circular grooves

4.4 Rectangular with triggering geometry

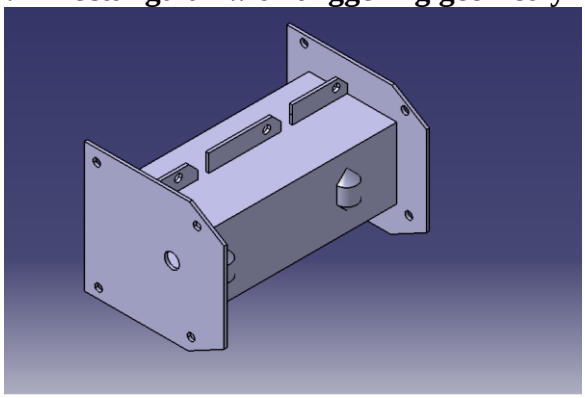

Figure 6: Rectangular with triggering geometry

4.5 Rectangular with circular cross section at joining part

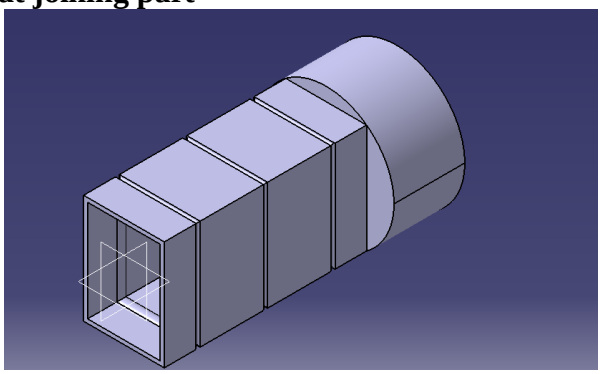

Figure 7: Rectangular with circular cross section at joint

ISSN (O): 2393-8609
International Journal of Aerospace and Mechanical Engineering
Volume 3 – No.2, April 2016

4.6 Rectangular

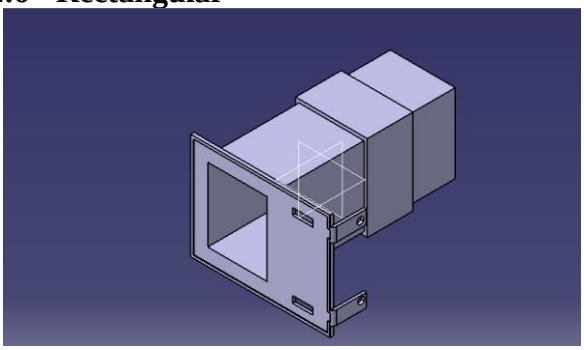

Figure 8: Rectangular crash box design

5. CONCLUSION

An innovative philosophy of crash box design has been successfully proposed. High crash energy absorption can be achieved. As the most important design parameter, the influence of the width of plane between ridge lines on crash deformation was quantitatively clarified. A new design scheme was successfully adopted to a real crash box by applying grooves to cross sectional shape to ensure the optimum range of the width of plane. As a result, the new crash box satisfies the both demands for improvement of crash worthiness and reduction of part weight. The new design philosophy can change the whole design of automotive parts for crash energy absorption, and definitely contribute to drastic weight reduction of steel parts.

6. REFERENCES

[1] "DEVELOPMENT OF CRASH-BOX FOR PASSENGER CAR WITH HIGH CAPABILITY FOR ENERGY ABSORPTION", CIMNE, Barcelona, 2005.

[2] 14th annual society of plastics and composite conference report [cetim and Momentive].

[3] Sumitomo Metals Won a Science and Technology Commendation from Minister of Education, Culture, Sports, Science and Technology with its Development of Crash-box that Improves Fuel Efficiency and Crash Safety.

[4] Sae.org(Redesign of Crash-Box for Enhanced Energy Absorption in Low Velocity Impact).