ISSN (O): 2393-8609

International Journal of Aerospace and Mechanical Engineering

Volume 3 – No.3, May 2016

Development Idea of Vehicle anti-collision System using Electromagnet and Ultrasonic Sensors

Shubham Agarwal
Department of Mechanical Engineering
University of Petroleum And Energy Studies
shubhamswarajagarwal@gmail.com

ABSTRACT

Electromagnetic anti-collision device is proposed here in order to avoid Vehicular Head to Head/Back collision that estimates the distance between the two vehicles running extreme traffic condition. It incorporates distance finding between two vehicles using ultrasonic range finder. The vehicle collision and its impact emerged as the major problem in the last two decades when the use of the automobile increased to a subsequent number. In order to avoid vehicle collision/ road accidents this system will work in two stages: - A Range finder will continuously track the distance between two vehicles moving and sends it to the ECM using these inputs if it finds the vehicle in the vicinity of the other it will automatically actuate the sensor strip for Electromagnetic Induction. This system is reliable, cost-efficient and fault tolerable. These characteristics enable the vehicle anti-collision in adaptive control environment.

General Terms

Induction, AVR, distance finder, ultrasonic, atmega16, solenoids, hardware, software, power supply.

1. INTRODUCTION

All the greatest achievements of the history, Automobile is most probably the one which significantly changed human life. The periodical improvement in the technology gives human race a new height. In the later years after independence the number of vehicles subsequently increased but in the last two decades it spreads drastically in every level of the society hence safety becomes the main concern. Road Accidents account a severe threat to the lives in both ways physical as well as financial, even after digital control of the vehicle. However, due to human avoidance, circumstantial error and negligence accidents occur. Many people lost their life every year in vehicle collision majorly due to drivers' inability to keenly observe the vehicles' vicinity while driving and in traffic condition.

Recently some research were carried out on the anti-collision device using ad hoc wireless network, V2V communication, GPS and Radar implementation but all these efforts were informatory in nature which gives signal to the driver or producing some buzzer/sound only but finally the action will be taken by the driver in which there are chances of the collision.

In this paper we are introducing an automatic vehicle anti-collision device Ultrasonic range finder and creating electromagnetic field to repels vehicles This paper work is originally motivated from the local traffic condition of Dehradun (Hilly Areas) specially where slow moving traffic on hilly roads often leads to minor or major accidents. On ascending/ descending a hilly road in traffic sometimes causes accidents while overtaking, sudden braking on turns, and loss of control while ascending on uphill roads. We develop a device which will not only provide driver a safe warning but also automatically actuates the safety switches on stipulated time before unusual situation.

2. BLOCK DIAGRAM

A micro controller (ATMEGA 16) receives echo signals from ultrasonic range finding sensor. This information is used to excite solenoids to create electromagnetic field. Ultrasonic sensors continuously read distance between two vehicles and output is displaying on dashboard of vehicle. If the distance reduces to certain level, excitation circuit starts working to create electromagnetic field. The developed Circuit can be interfaced with PC with the help of USB to serial cable. The program of each node is written on embedded C through coder and debugger AVR studio 4 and compiling through PONY-PROG software.

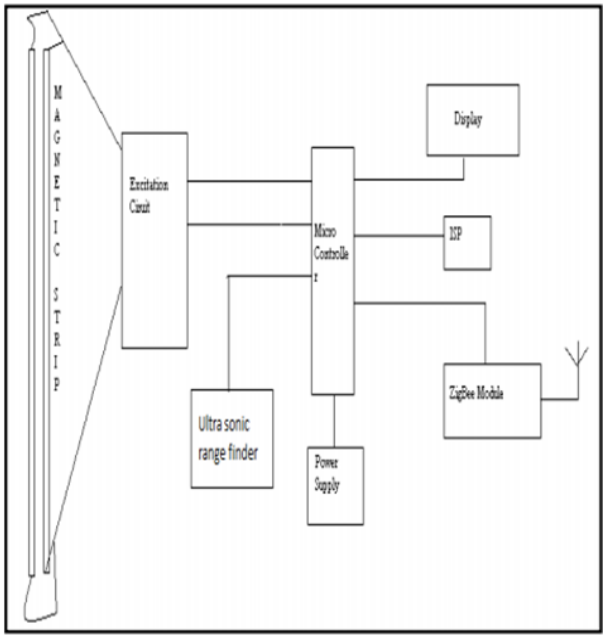

Fig1: Block Diagram

3. HARDWARE DEVELOPMENT

The power measuring unit measures the power from main line. This data is fed to microcontroller. Microcontroller fetches the data and transmits it over the network. The following is the list for the components used in the proposed model:

- ATmega16
- MAX232

ISSN (O): 2393-8609
International Journal of Aerospace and Mechanical Engineering
Volume 3 – No.3, May 2016

- Power supply units
- Ultrasonic Range finder
- Solenoids
- LCD Display

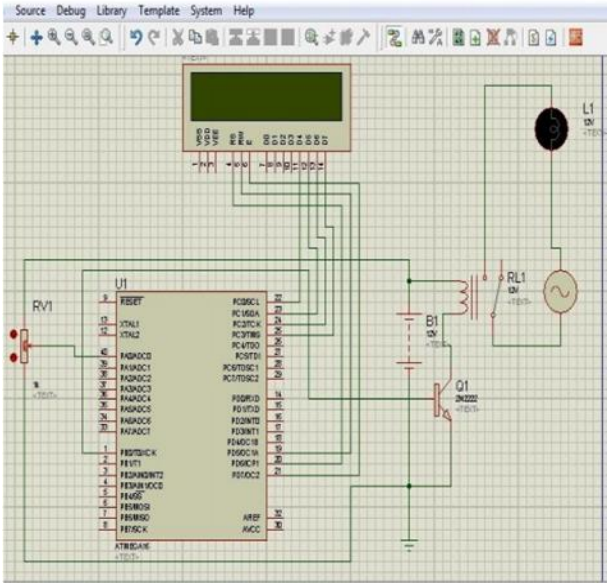

Fig2: Hardware setup in ISIS

A. Atmega16

It is a microcontroller from Atmel which is powered by the AVR core. It is an 8-bit,low powered microcontroller with 16 kilobytes in-system self-programmable flash. This core is capable of running 16MIPS with a 16MHz crystal. It has an advanced RISC architecture with 32 X 8 general purpose working registers. The microcontroller features programmable serial USART and master/slave SPI serial interface. It has 32 programmable I/O lines and 40 pin PDIP. It is capable of executing one instruction per cycle.

B. MAX232

This is level converter IC from MAXIM which is used to make logic compatibility between TTL and RS232 logic. The IC converts the 5V logic into a 8V negative logic. This converter is located between the almega16 microcontroller and the zigbee module, the microcontroller uses TTL logic whereas the zigbee module uses RS logic. The main purpose of this converter is to convert the TTL logic to RS logic.

C. POWER SUPPLY UNIT

This unit is basically designed to power up the node 1 and node 2. This provides 5 V, 500mA output to drive the nodes. Here, the AC voltage at 220V is stepped down to 20V using a 220/20V step down transformer. This AC voltage at 20V is fed to rectifier that converts it to DC voltage and is then filtered using 40 Farad shunt capacitor. The filtered DC voltage is then regulated using a 7805 regulator, and is then supplied to the the microcontroller at 5V, 500 mA.

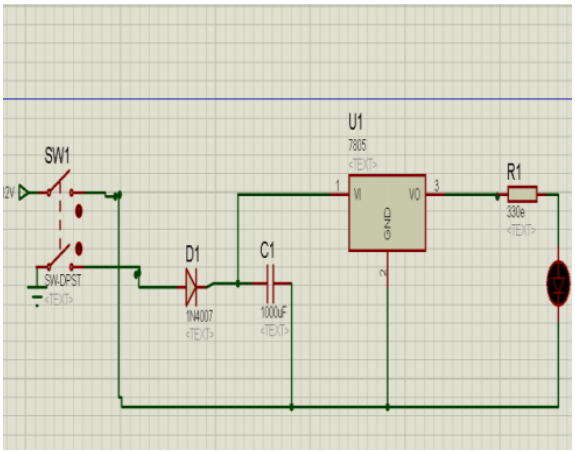

Fig3: Power supply setup in ISIS

D. Solenoids

A solenoid a coil wound into a tightly packed helix Solenoid refers to a long, thin loop of wire, which when wrapped around a piece of metal, produces a magnetic field when an electricity is passed through it. Solenoids are important because they can create controlled magnetic fields and can be used as electromagnets. The term solenoid refers specifically to a coil designed to produce a uniform magnetic field in a volume of space.

E. LCD

This is most widely used display device for embedded systems. The LCD unit receives character codes (8 bits per character) from a microprocessor or microcomputer, latches the codes to its display data RAM (80-byte DD RAM for storing 80 characters), transforms each character code into a 5´ 7 dot-matrix character pattern, and displays the characters on its LCD screen.

4. SOFTWARE DEVELOPMENT

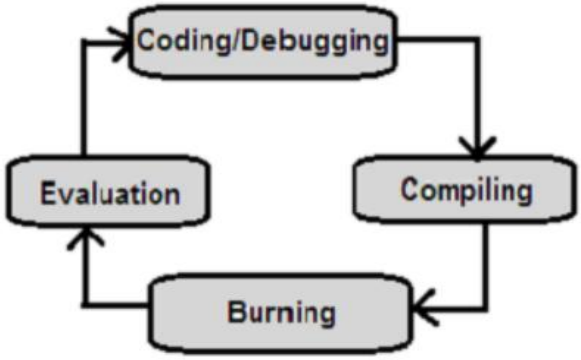

Fig4: Software Development Process

The firmware for the model is developed using C programming language. The binary code is generated with the help of WinAVR compiler based on GCC port by GNU. The IDE used is AVR Studio. The data logging system may use any of software that is capable of logging data from a serial port. It may be a user created software or a standard software like HyperTerminal. Microcontroller has been programmed to

test the hardware as well to achieve the goal of WSN application, which involved the following steps.

A. Coding / debugging

Coding / debugging in a high-level language (such as C, or Java) or assembler. A compiler for a high level language helps to reduce production time. To program the microcontrollers the WinAVR [2] was used. Although inline assembly was possible, the programming was done strictly in the C language. The source code has been commented to facilitate any occasional future improvement and maintenance.

WinAVR is a suite of executable, open source software development tools for the Atmel AVR series of RISC microprocessors hosted on the Windows platform. It includes the GNU GCC compiler for C and C++. WinAVR contains all the tools for developing on the AVR. This includes AVR-gcc (compiler), AVR-gdb (debugger) etc. Test Source Code has been written in C Language to test the microcontroller.

B. Compiling

The compilation of the C program converts it into machine language file (.hex). This is the only language the microcontroller will understand, because it contains the original program code converted into a hexadecimal format. During this step there were some warnings about eventual errors in the program.

C. Burning

Machine language (hex) file of compile program burned into the microcontroller's program memory is achieved with a dedicated programmer, which attached to a PC's peripheral. PC's serial port has been used for the purpose. In the present work the Ponyprog programmer has been used to burn the machine language file into the microcontroller's program memory. Ponyprog is serial device programmer software with a user-friendly GUI frame work available for Windows 95/ 98/ ME/ NT/2000/XP and Intel Linux. Its purpose is reading and writing every serial device. It supports I²C Bus, Micro wire, SPI eeprom, and the Atmel AVR and Microchip PIC microcontroller. The microcontrollers were programmed in approximately two seconds with a high speed-programming mode. The program memory, which is of Flash type, has, just like the EEPROM, a limited lifespan. On the AVR microcontroller family it may be reprogrammed up to a thousand times without any risk of data corruption.Atmega16Programmer (ISP) is used to burn the program into AVR microcontrollers.

5. RESULTS AND CONCLUSIONS

The circuitry was well verse checked and tested. All the results came in favor of the proposed idea. And therefore our next step will be in future the module will be developed and tested in the laboratory with dummy environmental conditions. And if the results are accurate with a minor tolerance value in coming months we will develop this system with GPS to log the position of collided vehicles to the emergency helpline.

6. REFERENCES

[1] [1] Benliang Li, Houjun Wang Bin Yan and Chijun Zhang, "The Research of Applying Wireless Sensor Network to intelligent Transportation System Based on IEEE 802.15.4", 6th international Conference on ITS Telecommunication proceeding,2006,pp 939-942

[2] Y. Morioka,T Sota, M.Nakagawa ," Anti-car collision system using DGSP and 5.8GHz Inter-Vehicle Communication at an off-sight Intersection " Technical report of IEICE ITS 2000-4, 2000, pp.19-24

[3] Mimoza Durresi, Arjan Durresi and Leonard

[4] Barolli,"Sensor Inter-vehicle Communication for Safer Highways", in proceedings of the 19th International Conference on Advanced Information Networking and Applications, AINA 2005.

[5] Samer Ammoun, Fawzi Nashashibi, Claude Laurgeau "Real-time crash avoidance system on crossroad based on 802.11 devices and GPS receivers", in proceedings of the IEEE ITSC 2006, IEEE Intelligent Transportation Systems Conference Toronto, Canada, September 2006.